TPKCPF9

Type	Teppanyaki grill
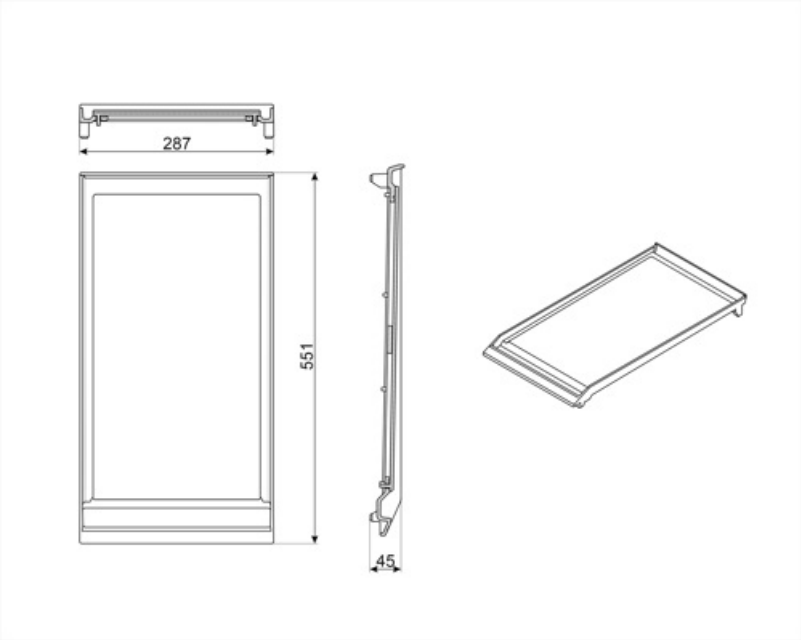
Teppanyaki grill plate, suitable for Portofino cookers