TPKX

Type

Teppanyaki grill
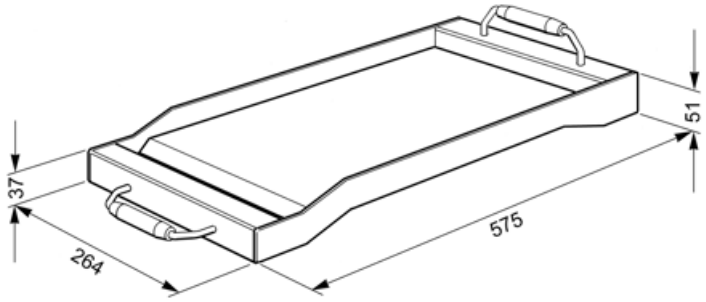
Teppanyaki stainless steel