TR103IBL2

Cooker size	100x60 cm
N. of cavities with energy label	2
Cavity heat source	ELECTRICITY
Hob type	Induction
Type of main oven	Thermo-ventilated
Type of second oven	Thermo-ventilated
Cleaning system main oven	Vapor Clean
EAN code	8017709312404
Energy efficiency class	A
Energy efficiency class, second cavity	B



Aesthetics

Design	Victoria	**Type of control knobs**	Smeg Victoria
Command panel finish	Enamelled metal	**Controls colour**	Stainless steel
Aesthetic	Victoria	**No. of controls**	9
Logo	assembled 50's	**Serigraphy colour**	Silver
Colour	Black	**Display name**	Electronic 5 buttons
Logo position	Upstand+ Command panel	**Door**	With frame
Finishing	Glossy	**Glass type**	Black
Upstand	Yes	**Handle**	Smeg Victoria
Hob colour	Black enamel	**Handle Colour**	Brushed stainless steel
Type of control setting hob	Control knobs	**Plinth**	Anthracite

Programs / Functions main oven

No. of cooking functions 6

Traditional cooking functions

Static

Fan assisted base + Vapor clean

Fan assisted

Circulaire

ECO Eco

Other functions

Defrost by time

Cleaning functions

 Vapor clean

Programs / Functions auxiliary oven

Cooking functions cavity 2	1

Traditional cooking functions, cavity 2

 Circulaire

Programs / Functions third oven

No. of functions third oven	1
Oven light	
Full grill	

Hob technical features



Total no. of cook zones 5

Front left - Induction - single - 1.30 kW - Booster 1.40 kW - - Ø 21.0 cm
Rear left - Induction - single - 2.30 kW - Booster 3.00 kW - - Ø 18.0 cm
Central - Induction - single - 2.30 kW - Booster 3.00 kW - - Ø 27.0 cm
Rear right - Induction - single - 1.30 kW - Booster 1.40 kW - - Ø 18.0 cm
Front right - Induction - single - 2.30 kW - Booster 3.00 kW - - Ø 21.0 cm

Automatic switch off when overheat	Yes	**Selected zone indicator**	Yes
Automatic pan detection	Yes		

Main Oven Technical Features



No. of lights	1	**Removable door**	Yes
Fan number	1	**Full glass inner door**	Yes
Net volume of the cavity	61 l	**Total no. of door glasses**	3
Gross volume, 1st cavity	70 l	**No.of thermo-reflective door glasses**	1
Cavity material	Ever Clean enamel	**Safety Thermostat**	Yes
No. of shelves	4	**Cooling system**	Tangential
Type of shelves	Metal racks	**Usable cavity space dimensions (HxWxD)**	316x460x412 mm
Light type	Halogen	**Temperature control**	Electro-mechanical
Light Power	40 W		
Cooking time setting	Start and Stop		
Door opening	Side opening		

Lower heating element power	1200 W
Upper heating element - Power	1000 W
Circular heating element - Power	2000 W

Options Main Oven

Timer	Yes	**Minimum Temperature**	50 °C
End of cooking acoustic alarm	Yes	**Maximum temperature**	250 °C

Second Oven Technical Features



Fan number	2	**Removable door**	Yes
Net volume of the second cavity	84 l	**Full glass inner door**	Yes
Gross volume, 2nd cavity	94 l	**Removable inner door**	Yes
Cavity material	Ever Clean enamel	**No. total door glasses**	2
No. of shelves	9	**No. thermo-reflective door glasses**	1
Type of shelves	Metal racks	**Safety Thermostat**	Yes
No. of lights	1	**Cooling system**	Tangential
Light type	Halogen	**Usable cavity space dimensions (HxWxD)**	605x375x375 mm
Light Power	40 W	**Temperature control**	Electro-mechanical
Door opening	Side opening	**Circular heating element - Power**	2 x 1550 W

Options Auxiliary Oven

Minimum Temperature	50 °C	**Maximum temperature**	245 °C

Third Oven Technical Features



Net volume, 3rd cavity	36 l	**Removable inner door**	Yes
Gross volume, 3rd cavity	41 l	**No. total door glasses**	3
Cavity material	Ever Clean enamel	**No. of thermo-reflective door glasses**	1
No. of shelves	2	**Safety Thermostat**	Yes
Type of shelves	Metal racks	**Cooling system**	Tangential
No. of lights	1	**Usable cavity space dimensions (HxWxD)**	169x440x443 mm
Light type	Halogen		
Light Power	40 W	**Temperature control**	Electro-mechanical
Door opening	Flap down	**Large grill - Power**	2700 W
Removable door	Yes	**Grill type**	Electric

Full glass inner door	Yes	**Tilting grill**	Yes

Options Third Oven

Minimum Temperature	50 °C	**Maximum temperature**	260 °C

Accessories included for Main Oven & Hob



Rack with back and side stop	2	**Grill mesh**	1
40mm deep tray	1	**Telescopic Guide rails, partial Extraction**	1

Accessories included for Secondary Oven



Oven grid with back stop	4	**Plate rack/warmer**	1

Accessories included for Third Oven

Rack with back and side stop	1	**40mm deep tray**	1

Electrical Connection

Electrical connection rating	15400 W	**Power supply cable length**	150 cm
Current	43 A	**Additional connection modalities**	Double and Three Phase
Voltage	220-240 V		
Voltage 2 (V)	380-415 V	**Frequency**	50/60 Hz
Electric cable	Installed, Single phase	**Terminal block**	5 poles
		Plug	Not present

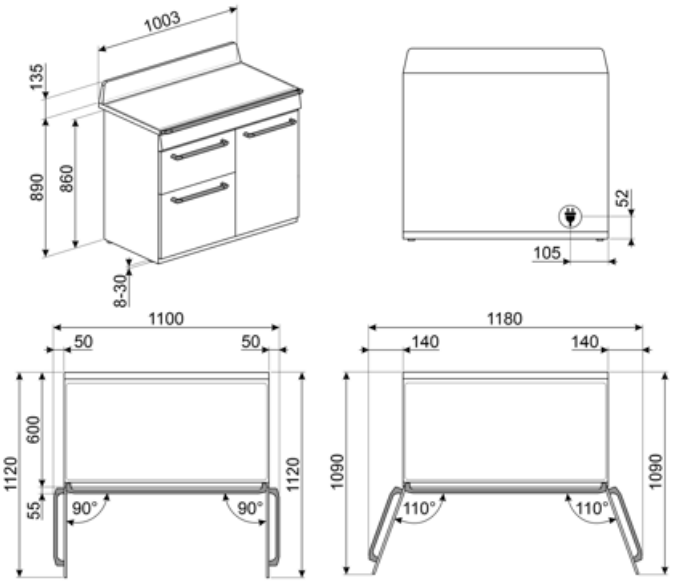
1003
135
890
860
8-30
52
105
1100
50
50
600
1120
55
90°
90°
1180
140
140
1090
110°
110°

Compatible Accessories

AIRFRY2



Air fryer tray. Ideal for recreating traditional frying in the oven, but with fewer calories and less fat. It allows you to cook quickly and simply dishes such as French fries, fried vegetables and fish, ensuring perfect browning and crispiness.

BBQ



Double sided plate BBQ. Suitable for recreating succulent and crispy dishes in the oven with the typical taste of grilled cooking. The ribbed side is particularly suitable for meats and cheeses. The smooth side for fish, seafood and vegetables.

BN620-1



Enamelled tray suitable for 45 cm and 60 cm ovens. Depth 20 mm. Perfect for a wide range of savoury and sweet baking.

BN640



Enamelled tray suitable for 45cm and 60cm ovens. Depth 540 mm. Perfect for cooking and roasting meat and fish in sauces. Also ideal for experimenting with lighter and crunchy side dishes

BNP608T



Teflon-coated tray, 8 mm depth, to be placed on the grid

GRILLPLATE



Universal griddle for induction, gas, ceramic and electric hobs. Non-stick surface ideal for cooking meat, cheese and vegetables. Dimensions: 410 x 240 mm.

GTP



Partially extractable telescopic guides (1 level), suitable for traditional ovens. Made in stainless steel, they guarantee stability and facilitate the smooth extraction of the trays.

GTT



Totally extractable telescopic guides (1 level), suitable for traditional ovens. Made in stainless steel, they guarantee stability and facilitate the smooth extraction of the trays.

KIT1TR103



Splashback black, 100cm ,suitable for TR103 Victoria cookers

KITH103



Height extension kit (950 mm), black, suitable for TR103 cookers (945-960mm)

PALPZ



Pizza shovel with folding handle. Dimensions L31.5 x H32.5 cm. Easy and convenient to use and store. Perfect for serving pizza, bread and savory pastries in a safe and professional way.

SCRP



Non-scratch hob scraper - suitable for induction and ceramic hobs

SFLK1



Child lock

SMOLD

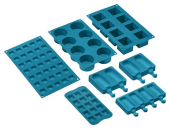

Set of 7 silicone moulds for ice creams, ice lollies, pralines, ice cubes or to portion food. Usable from -60°C to +230°C

TPKPLATE



Universal plate for induction, gas, ceramic and electric hobs. Non-stick surface ideal for cooking fish, eggs and vegetables. Dimensions: 410 X 240 mm.

Symbols glossary



Child lock: some models are fitted with a device to lock the programme/cycle so it cannot be accidentally changed.



Installation in column: Installation in column.



B: Product energy rating, measured from A+++ to D / G depending on the product family.



Double glazed doors: Number of glazed doors.



ECO-logic: option allows you to restrict the power limit of the appliance real energy saving.



Fan assisted: Intense and homogeneous traditional cooking, also suitable for complex recipes. The fan is active and the heat comes from below and from above at the same time. Ventilated cooking ensures a faster and more homogeneous result, leaving fragrant foods outside and moister inside. Ideal for baked pasta, biscuits, roasts and cobblers.



Circulaire: it is the perfect function for cooking all types of dishes in a more delicate way. The heat comes from the back of the oven and is distributed quickly and evenly. The fan is active. It is also ideal for cooking on multiple levels without mixing smells and flavors.



Grill element: Using of grill gives excellent results when cooking meat of medium and small portions, especially when combined with a rotisserie (where possible). Also ideal for cooking sausages and bacon.



Overheat protection: The safety system that automatically turns off the hob in case of overheating of the control unit.



Energy efficiency class A



Air cooling system: to ensure a safe surface temperatures.



Defrost by time: Manual defrost function. At the end of the set duration, the function stops.



Triple glazed doors: Number of glazed doors.



Ever Clean Enamel: Ever Clean enamel is applied electrostatically, corner to corner and edge to edge to prevent cracking or cracks over time. It is a particular pyrolytic enamel, resistant to acids which, in addition to being pleasantly bright, promotes greater cleaning of the oven walls, thanks to its lower porosity. It is baked at over 850 °C and slowly polymerized at a scientifically determined rate to ensure uniform depth and strength. Ever Clean enamel creates an impeccable finish both on the inside of the oven and on the trays, making the surfaces of the oven incredibly easy to maintain over time as it reduces the adhesion of fat during cooking.



Static: Traditional cooking suitable for the preparation of one dish at a time. The fan is not active and the heat comes from below and from above at the same time. Static cooking is slower and more delicate, ideal in order to get well cooked and dry dishes even inside. Ideal for cooking all types of roasts, fatty meats, bread, filled cakes.



ECO: low energy consumption cooking: this function is particularly suitable for cooking on a single shelf with low energy consumption. It is recommended for all types of food except those that can generate a lot of moisture (for example vegetables). To achieve maximum energy savings and reduce time, it is recommended to put the food in the oven without preheating the cooking compartment.



Light



Induction: The work of these hobs is based on the principle of electromagnetic induction. The heat is generated directly in the bottom of the pan during its contact with the hob.

All glass inner door: All glass inner door, a single flat surface which is simple to keep clean.

Plate rack warming: function for heating or keeping dishes warm. Place the baking tray on the lowest shelf and stack the dishes to be heated.

The oven cavity has 4 different cooking levels.

Telescopic rails: allow you to pull out the dish and check it without having to remove it from the oven entirely.

Tilting grill: the tilting grill can be easily unhooked to move the heating element and clean the roof of the appliance in one simple step.

The capacity indicates the amount of usable space in the oven cavity in litres.

The capacity indicates the amount of usable space in the oven cavity in litres.

Side lights: Two opposing side lights increase visibility inside the oven.

The oven cavity has 2 different cooking levels.

The oven cavity has 9 different cooking levels.

Electronic control: Allows you to maintain temperature inside the oven with the precision 2-3 ° C. This enables to cook meals that are very sensitive to temperature changes, such as cakes, souffles, puddings.

Vapor Clean: a simple cleaning function using steam to loosen deposits in the oven cavity.

The capacity indicates the amount of usable space in the oven cavity in litres.

Knobs control

Benefit (TT)

Induction hob

Induction offers fast cooking and precise temperature control

Through the use of suitable cookware, induction is easy to use and maintain, safe and responsive.

Vapor Clean

By inserting water into a recess at the bottom of the cavity, steam is generated, which softens the residue and facilitates its removal

By inserting water into a recess at the bottom of the cavity, steam is generated, which softens the residue and facilitates its removal.

Buttons control

Easy and intuitive timer setting with a simple buttons

True-convection

The best cooking performances guaranteed by ventilated circular flow

Multiple fans and heating elements guarantee the perfect aerodynamic heat flow, allowing homogeneous and quicker cooking inside the cavity.

Multilevel cooking

Several cooking levels allow maximum flexibility of use

Multilevel halogen light

Internal halogen lighting on different levels guarantees excellent visibility

Tangential cooling

New cooling system with tangential fan and airflow from the door to the splashback

Telescopic guides

Easy extraction and safe insertion of trays into the oven thanks to telescopic guides

Adjustable height

Cooker top flushed with the working area thanks to adjustable feet

Isothermic Cavity

The best cooking performance at the highest energy efficiency

Cold door

During any function, the external door glass is cold, avoiding any risk of burns

AirFry (AIRFRY optional accessory)

Lighter and tastier food thanks to airfry basket (optional accessory)

BBQ (optional accessory)

Barbecue cooking directly in the oven with the double-sided grill (BBQ optional accessory)

Pizza stone (optional accessory)

Baking with refractory stone for soft and crispy pizza and yeast products (STONE optional accessory)

Single turbine

The oven has a fan equipped with a circular heating element allowing cooking with rotating heat