TR4110AZ

Cooker size	110x60 cm
N. of cavities with energy label	2
Cavity heat source	Electric
Hob type	Gas
Type of main oven	Thermo-ventilated
Type of second oven	Fan assisted
Cleaning system main oven	Vapor Clean
EAN code	8017709184278
Energy efficiency class	A
Energy efficiency class, second cavity	A



Aesthetics

Design	Victoria	**Control knobs**	Smeg Victoria
Command panel finish	Enamelled metal	**Controls colour**	Stainless steel
Aesthetics	Victoria	**No. of controls**	12
Logo	assembled 50's	**Serigraphy colour**	Black
Colour	Pastel Blue	**Display**	electronic 5 buttons
Logo position	Upstand	**Door**	With frame
Finishing	Gloss	**Glass type**	Black
Upstand	Yes	**Handle**	Smeg Victoria
Hob colour	Black enamel	**Handle Colour**	Brushed stainless steel
Type of pan stands	Cast Iron	**Storage compartment**	Drawer
Type of control setting	Control knobs	**Plinth**	Anthracite

Programs / Functions

No. of cooking functions 5

Traditional cooking functions

Static

Fan assisted

Circulaire

ECO

Fan assisted base

Other functions

Defrost

Cleaning functions

Vapor Clean

Programs / Functions Auxiliary Oven

Cooking functions cavity 2 5

Traditional cooking functions, cavity 2

Static | Fan assisted | Circulaire

ECO | Fan-assisted bottom

Vapor Clean

Cleaning functions cavity 2

Other functions cavity 2

Defrost

Programme / Functions Third Oven

No. of functions third oven 1

Oven light

Full grill

Hob technical features

UR

Total no. of cook zones 7

Left - Gas - 2UR (dual) - 4.20 kW
Front left - Gas - AUX - 1.00 kW
Rear left - Gas - Rapid - 2.90 kW
Front centre - Gas - Rapid - 2.90 kW
Rear centre - Gas - AUX - 1.00 kW
Front right - Gas - Semi Rapid - 1.80 kW
Rear right - Gas - Semi Rapid - 1.80 kW

Type of gas burners	Standard	**Gas safety valves**	Yes
Automatic electronic ignition	Yes	**Burner caps**	Matte black enamelled

Main Oven Technical Features

No. of lights 1

Total no. of door glasses 3

Net volume of the cavity	61 litres
Gross volume, 1st cavity	70 l
Cavity material	Easy clean enamel
Shelf positions	4
Type of shelves	Metal racks
Light type	Halogen
Light power	40 W
Cooking time setting	Start and Stop
Door opening	Side opening
Removable door	Yes
Full glass inner door	Yes
Removable inner door	Yes
No.of thermo-reflective door glasses	1
Safety Thermostat	Yes
Cooling system	Tangential
Usable cavity space dimensions (HxWxD)	316x460x412 mm
Temperature control	Electro-mechanical
Lower heating element power	1200 W
Upper heating element - Power	1000 W
Grill elememt	1700 W
Large grill - Power	2700 W
Circular heating element - Power	2700 W
Grill type	Electric

Options Main Oven

Timer	Yes
End of cooking acoustic alarm	Yes
Minimum Temperature	50 °C
Maximum temperature	260 °C

Second Oven Technical Features



Net volume of the second cavity	61 litres
Gross volume, 2nd cavity	70 l
Cavity material	Easy clean enamel
Shelf positions	4
Type of shelves	Metal racks
No. of lights	1
Light type	Halogen
Light power	40 W
Door opening	Side opening
Removable door	Yes
Full glass inner door	Yes
Removable inner door	Yes
No. total door glasses	3
No. thermo-reflective door glasses	1
Safety Thermostat	Yes
Cooling system	Tangential
Usable cavity space dimensions (HxWxD)	316x444x425 mm
Temperature control	Electro-mechanical
Lower heating element - power	1200 W
Upper heating element - Power	1000 W
Grill element - power	1700 W
Large grill - Power	2700 W
Grill type	Electric
Tilting grill	Yes

Options Auxiliary Oven

Minimum Temperature	50 °C
Maximum temperature	260 °C

Third Oven Technical Features

Net volume, 3rd cavity	36 l
Gross volume, 3rd cavity	41 l
Cavity material	Easy clean enamel
Shelf positions	2
Type of shelves	Metal racks
No. of lights	1
Light type	Incandescent
Light power	25 W
Door opening	Flap down
Removable door	Yes
Full glass inner door	Yes
Removable inner door	Yes
No. total door glasses	3
No. of thermo-reflective door glasses	1
Safety Thermostat	Yes
Cooling system	Tangential
Usable cavity space dimensions (HxWxD)	169x440x443 mm
Temperature control	Electro-mechanical
Large grill - Power	2700 W
Grill type	Electric
Tilting grill	Yes

Options Third Oven

Minimum Temperature	50 °C
Maximum temperature	260 °C

Accessories included for Main Oven & Hob



Cast iron wok support	1
Chrome shelf with back and side stop	2
40mm deep tray	1
Grill mesh	1
Telescopic Guide rails, partial Extraction	1

Accessories included for Secondary Oven



Chrome shelf with back and side stop	2
40mm deep tray	1
Grill mesh	1
Telescopic Guide rails, partial Extraction	1

Accessories included for Third Oven

Chrome shelf with back and side stop	1
40mm deep tray	1

Electrical Connection

Max Power Draw	8400 W
Current	37 A
Voltage	220-240 V
Voltage 2 (V)	380-415 V
Type of electric cable	Yes, Single phase
Cable testing	Yes
Additional connection modalities	Yes, Double and Three Phase
Frequency	50/60 Hz
Terminal block	5 poles
Plug	No

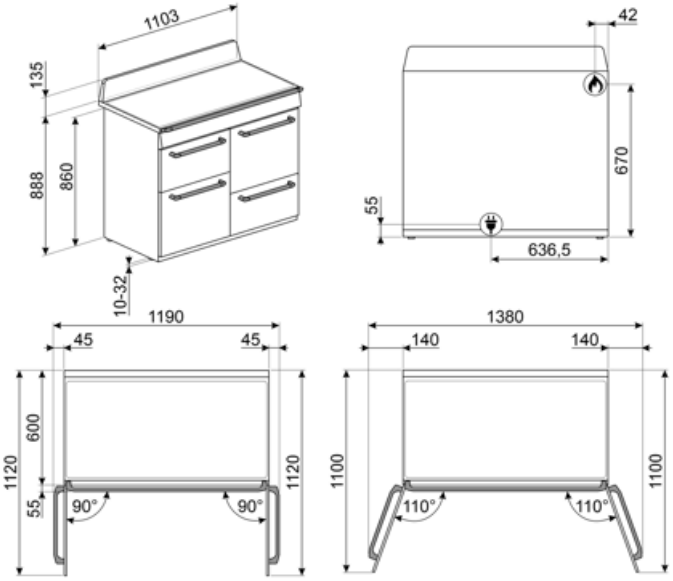
1103
135
888
860
10-32
42
670
55
636,5
1190
45
45
600
1120
1120
55
90°
90°
1380
140
140
1100
1100
110°
110°

Compatible Accessories



AIRFRY2

Air fryer tray. Ideal for recreating traditional frying in the oven, but with fewer calories and less fat. It allows you to cook quickly and simply dishes such as French fries, fried vegetables and fish, ensuring perfect browning and crispiness.



BBQ

Double sided plate BBQ. Suitable for recreating succulent and crispy dishes in the oven with the typical taste of grilled cooking. The ribbed side is particularly suitable for meats and cheeses. The smooth side for fish, seafood and vegetables.



BN620-1

Enamelled tray, 20mm deep



BN640

Enamelled tray, 40mm deep



BNP608T

Teflon-coated tray, 8mm depth, to be placed on the grid



GTP

Partially extractable telescopic guides (1 level) Extraction: 300 mm Material: Stainless steel AISI 430 polished



GTT

Totally extractable telescopic guides (1 level) Extraction: 433 mm Material: Stainless steel AISI 430 polished



KIT1TR41N

Splashback 110x75 cm suitable for TR4110 Victoria cookers, black



KIT600TR4110

Cover strip for hob back side, suitable for TR4110 Victoria cookers



KITH4110

Height extension kit (950 mm), suitable for TR4110 cookers (945-965mm)



KITP65TR41

Depth extension kit (650 mm), suitable for TR4110 cookers



PALPZ

Pizza shovel with fold away handle width: 315mm length : 325mm



SFLK1

Child lock

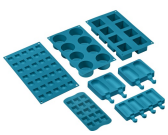

SMOLD

Set of 7 silicone moulds for ice creams, ice lollies, pralines, ice cubes or to portion food. Usable from -60°C to +230°C

Symbols glossary



Heavy duty cast iron pan stands: for maximum stability and strength.



Installation in column: Installation in column



With the switch on this symbol, no heating is possible even if the thermostat is turned.



Enamel interior: The enamel interior of all Smeg ovens have a special antacid lining which helps keep the interior clean by reducing the amount of cooking grease adhering to it.



Fan with upper and lower elements: The elements combined with the fan aim to provide more uniform heat, a similar method to conventional cooking, so pre-heat is required. Most suitable for items requiring slow cooking methods.



Circulaire: The combination of the fan and circular element around it gives a hot air cooking method. This provides many benefits including no preheat if cook time is more than 20 minutes, no flavour transfer when cooking different foods at the same time, less energy, and shorter cook times. Good for all types of food.



Grill element: Using of grill gives excellent results when cooking meat of medium and small portions, especially when combined with a rotisserie (where possible). Also ideal for cooking sausages and bacon.



All glass inner door: All glass inner door, a single flat surface which is simple to keep clean.



Side lights: Two opposing side lights increase visibility inside the oven.



The oven cavity has 4 different cooking levels.



Electronic control: Allows you to maintain temperature inside the oven with the precision 2-3 ° C. This enables to cook meals that are very sensitive to temperature changes, such as cakes, souffles, puddings.



A: Product drying performance, measured from A+++ to D / G depending on the product family



Air cooling system: to ensure a safe surface temperatures.



Triple glazed doors: Number of glazed doors.



Fan assisted base: the mix of fan and lower heating element alone allows to finish cooking foods already cooked on the surface but not internally more quickly. This system is recommended to finish cooking foods that are already well cooked on the surface, but not internally, which therefore require a moderate higher heat. Ideal for any type of food.



Upper and lower element only: a traditional cooking method best suited for single items located in the centre of the oven. the top pf the oven will always be hottest. Ideal for roast, fruit cakes, bread etc.



ECO: The combination of the grill, fan and lower element is particularly suitable for cooking small quantities of food.



Light



The inner door glass: can be removed with a few quick movements for cleaning.



The oven cavity has 2 different cooking levels.



Telescopic rails: allow you to pull out the dish and check it without having to remove it from the oven entirely.



Tilting grill: the tilting grill can be easily unhooked to move the heating element and clean the roof of the appliance in one simple step.

Ultra rapid burners: Powerful ultra rapid burners offer up to 5kw of power.

Vapor Clean: a simple cleaning function using steam to loosen deposits in the oven cavity.

The capacity indicates the amount of usable space in the oven cavity in litres.

The capacity indicates the amount of usable space in the oven cavity in litres.

Knobs control

Benefit

Gas hob

Gas provides constant control of the heat source, with an immediate change in temperature

Equipped with a thermocouple, the gas supply is cut off if the flame is extinguished for greater safety

Vapor Clean

Smeg's Vapor Clean function, is an assisted steam clean program designed to help loosen food residue and spills inside the oven for easy cleaning

Smeg's Vapor Clean function, is an assisted steam clean program designed to help loosen food residue and spills inside the oven for easy cleaning

Buttons control

Easy and intuitive timer setting with a simple buttons

Drawer storage compartment

More space thanks to the lower compartment, ideal for storing accessories or cooking utensils

Circulaire

The best cooking performances guaranteed by ventilated circular flow.

Multiple fans and heating elements guarantee the perfect aerodynamic heat flow, allowing homogeneous and quicker cooking inside the cavity.

Multilevel cooking

Several cooking levels allow maximum flexibility of use

Multilevel halogen light

Internal halogen lighting on different levels guarantees excellent visibility

Removalble inner glass

Internal door glasses are easily removable for complete cleaning

Tangential cooling

New cooling system with tangential fan and airflow from the door to the splashback

Telescopic guides

Easy extraction and safe insertion of trays into the oven thanks to telescopic guides

Adjustable height

Cooker top flushed with the working area thanks to adjustable feet

Isothermic Cavity

The best cooking performance at the highest energy efficiency

Cold door

During any function, the external door glass is cold, avoiding any risk of burns

AirFry (AIRFRY optional accessory)

Lighter and tastier food thanks to airfry basket

BBQ (optional accessory)

Barbeque cooking directly in the oven with the double-sided grill

Pizza stone (optional accessory)

Baking with refractory stone for soft and crispy pizza and yeast products (STONE optional accessory)