TR4110GR

Cooker size	110x60 cm
N. of cavities with energy label	2
Cavity heat source	ELECTRICITY
Hob type	Gas
Type of main oven	Thermo-ventilated
Type of second oven	Fan assisted
Cleaning system main oven	Vapor Clean
EAN code	8017709271435
Energy efficiency class	A
Energy efficiency class, second cavity	A



Aesthetics

Design	Victoria	**Type of control knobs**	Smeg Victoria
Command panel finish	Enamelled metal	**Controls colour**	Stainless steel
Aesthetic	Victoria	**No. of controls**	12
Logo	assembled 50's	**Serigraphy colour**	Black
Colour	Slate Grey	**Display name**	Electronic 5 buttons
Logo position	Upstand	**Door**	With frame
Finishing	Glossy	**Glass type**	Stopsol
Upstand	Yes	**Handle**	Smeg Victoria
Hob colour	Black enamel	**Handle Colour**	Brushed stainless steel
Type of pan stands	Cast Iron	**Storage compartment**	Drawer
Type of control setting hob	Control knobs	**Plinth**	Anthracite

Programs / Functions main oven

No. of cooking functions 5

Traditional cooking functions

Static

Fan assisted

Circulaire

Eco

Fan assisted base

Other functions

Defrost

Cleaning functions

Vapor clean

Programs / Functions auxiliary oven

Cooking functions cavity 2 5

Traditional cooking functions, cavity 2

Static | Fan assisted | Circulaire

Eco | Fan-assisted bottom

Vapor Clean

Cleaning functions cavity 2

Other functions cavity 2

Defrost

Programs / Functions third oven

No. of functions third oven 1

Oven light

Full grill

Hob technical features

UR

Total no. of cook zones 7

Left - Gas - 2UR (dual) - 4.20 kW
Front left - Gas - AUX - 1.00 kW
Rear left - Gas - Rapid - 2.90 kW
Front centre - Gas - Rapid - 2.90 kW
Rear centre - Gas - AUX - 1.00 kW
Front right - Gas - Semi Rapid - 1.80 kW
Rear right - Gas - Semi Rapid - 1.80 kW

Type of gas burners	Standard	**Gas safety valves**	Yes
Automatic electronic ignition	Yes	**Burner caps**	Matt black enamelled

Main Oven Technical Features

No. of lights	1	**Removable inner door**	Yes

Fan number	1
Net volume of the cavity	61 l
Gross volume, 1st cavity	70 l
Cavity material	Ever Clean enamel
No. of shelves	4
Type of shelves	Metal racks
Light type	Halogen
Light Power	40 W
Cooking time setting	Start and Stop
Door opening	Side opening
Removable door	Yes
Full glass inner door	Yes
Total no. of door glasses	3
No.of thermo-reflective door glasses	1
Safety Thermostat	Yes
Cooling system	Tangential
Usable cavity space dimensions (HxWxD)	316x460x412 mm
Temperature control	Electro-mechanical
Lower heating element power	1200 W
Upper heating element - Power	1000 W
Grill element	1700 W
Large grill - Power	2700 W
Circular heating element - Power	2700 W
Grill type	Electric

Options Main Oven

Timer	Yes
End of cooking acoustic alarm	Yes
Minimum Temperature	50 °C
Maximum temperature	260 °C

Second Oven Technical Features



Net volume of the second cavity	61 l
Gross volume, 2nd cavity	70 l
Cavity material	Ever Clean enamel
No. of shelves	4
Type of shelves	Metal racks
No. of lights	1
Light type	Halogen
Light Power	40 W
Door opening	Side opening
Removable door	Yes
Full glass inner door	Yes
Removable inner door	Yes
No. total door glasses	3
No. thermo-reflective door glasses	1
Safety Thermostat	Yes
Cooling system	Tangential
Usable cavity space dimensions (HxWxD)	316x444x425 mm
Temperature control	Electro-mechanical
Lower heating element - power	1200 W
Upper heating element - Power	1000 W
Grill element - power	1700 W
Large grill - Power	2700 W
Grill type	Electric
Tilting grill	Yes

Options Auxiliary Oven

Minimum Temperature	50 °C
Maximum temperature	260 °C

Third Oven Technical Features

Net volume, 3rd cavity	36 l
Gross volume, 3rd cavity	41 l
Cavity material	Ever Clean enamel
No. of shelves	2
Type of shelves	Metal racks
No. of lights	1
Light type	Incandescent
Light Power	25 W
Door opening	Flap down
Removable door	Yes
Full glass inner door	Yes
Removable inner door	Yes
No. total door glasses	3
No. of thermo-reflective door glasses	1
Safety Thermostat	Yes
Cooling system	Tangential
Usable cavity space dimensions (HxWxD)	169x440x443 mm
Temperature control	Electro-mechanical
Large grill - Power	2700 W
Grill type	Electric
Tilting grill	Yes

Options Third Oven

Minimum Temperature	50 °C
Maximum temperature	260 °C

Accessories included for Main Oven & Hob



Cast iron wok support 1	**Grill mesh** 1
Rack with back and side stop 2	**Telescopic Guide rails, partial Extraction** 1
40mm deep tray 1	

Accessories included for Secondary Oven



Rack with back and side stop 2	**Grill mesh** 1
40mm deep tray 1	**Telescopic Guide rails, partial Extraction** 1

Accessories included for Third Oven

Rack with back and side stop 1	**40mm deep tray** 1

Electrical Connection

Electrical connection rating	8400 W
Current	37 A
Voltage	220-240 V
Electric cable	Installed, Single phase
Cable testing	Yes, Single phase
Additional connection modalities	Double and Three Phase
Frequency	50/60 Hz
Terminal block	5 poles
Plug	Not present

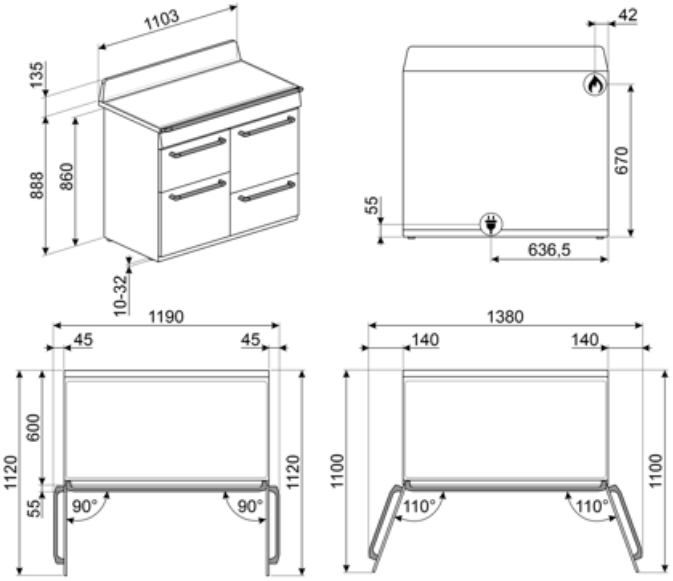
1103
135
888
860
10-32
42
670
55
636,5
1190
45
45
600
1120
1120
55
90°
90°
1380
140
140
1100
1100
110°
110°

Compatible Accessories



AIRFRY2

Air fryer tray. Ideal for recreating traditional frying in the oven, but with fewer calories and less fat. It allows you to cook quickly and simply dishes such as French fries, fried vegetables and fish, ensuring perfect browning and crispiness.



BN620-1

Enamelled tray suitable for 45 cm and 60 cm ovens. Depth 20 mm. Perfect for a wide range of savoury and sweet baking.



BNP608T

Teflon-coated tray, 8 mm depth, to be placed on the grid



GTT

Totally extractable telescopic guides (1 level), suitable for traditional ovens. Made in stainless steel, they guarantee stability and facilitate the smooth extraction of the trays.



KIT600TR4110

Cover strip for hob back side, suitable for TR4110 Victoria cookers



KITP65TR41

Depth extension kit (650 mm), black, suitable for TR4110 cookers



SFLK1

Child lock



BBQ

Double sided plate BBQ. Suitable for recreating succulent and crispy dishes in the oven with the typical taste of grilled cooking. The ribbed side is particularly suitable for meats and cheeses. The smooth side for fish, seafood and vegetables.



BN640

Enamelled tray suitable for 45cm and 60cm ovens. Depth 540 mm. Perfect for cooking and roasting meat and fish in sauces. Also ideal for experimenting with lighter and crunchy side dishes



GTP

Partially extractable telescopic guides (1 level), suitable for traditional ovens. Made in stainless steel, they guarantee stability and facilitate the smooth extraction of the trays.



KIT1TR41N

Splashback black, 110cm ,suitable for TR4110 Victoria cookers



KITH4110

Height extension kit (950mm), black, suitable for TR4110 cookers (945-965mm)



PALPZ

Pizza shovel with folding handle. Dimensions L31.5 x H32.5 cm. Easy and convenient to use and store. Perfect for serving pizza, bread and savory pastries in a safe and professional way.

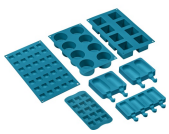

SMOLD

Set of 7 silicone moulds for ice creams, ice lollies, pralines, ice cubes or to portion food. Usable from -60°C to +230°C

Symbols glossary



Heavy duty cast iron pan stands: for maximum stability and strength.



Installation in column: Installation in column.



Air cooling system: to ensure a safe surface temperatures.



Triple glazed doors: Number of glazed doors.



Fan assisted base: the mix of fan and lower heating element alone allows to finish cooking foods already cooked on the surface but not internally more quickly. This system is recommended to finish cooking foods that are already well cooked on the surface, but not internally, which therefore require a moderate higher heat. Ideal for any type of food.



Static: Traditional cooking suitable for the preparation of one dish at a time. The fan is not active and the heat comes from below and from above at the same time. Static cooking is slower and more delicate, ideal in order to get well cooked and dry dishes even inside. Ideal for cooking all types of roasts, fatty meats, bread, filled cakes.



ECO: low energy consumption cooking: this function is particularly suitable for cooking on a single shelf with low energy consumption. It is recommended for all types of food except those that can generate a lot of moisture (for example vegetables). To achieve maximum energy savings and reduce time, it is recommended to put the food in the oven without preheating the cooking compartment.



Light



The inner door glass: can be removed with a few quick movements for cleaning.



Energy efficiency class A



Knobs control



With the switch on this symbol, no heating is possible even if the thermostat is turned.



Ever Clean Enamel: Ever Clean enamel is applied electrostatically, corner to corner and edge to edge to prevent cracking or cracks over time. It is a particular pyrolytic enamel, resistant to acids which, in addition to being pleasantly bright, promotes greater cleaning of the oven walls, thanks to its lower porosity. It is baked at over 850 °C and slowly polymerized at a scientifically determined rate to ensure uniform depth and strength. Ever Clean enamel creates an impeccable finish both on the inside of the oven and on the trays, making the surfaces of the oven incredibly easy to maintain over time as it reduces the adhesion of fat during cooking.



Fan assisted: Intense and homogeneous traditional cooking, also suitable for complex recipes. The fan is active and the heat comes from below and from above at the same time. Ventilated cooking ensures a faster and more homogeneous result, leaving fragrant foods outside and moister inside. Ideal for baked pasta, biscuits, roasts and cobblers.



Circulaire: it is the perfect function for cooking all types of dishes in a more delicate way. The heat comes from the back of the oven and is distributed quickly and evenly. The fan is active. It is also ideal for cooking on multiple levels without mixing smells and flavors.



Grill element: Using of grill gives excellent results when cooking meat of medium and small portions, especially when combined with a rotisserie (where possible). Also ideal for cooking sausages and bacon.



All glass inner door: All glass inner door, a single flat surface which is simple to keep clean.



Side lights: Two opposing side lights increase visibility inside the oven.

The oven cavity has 2 different cooking levels.

Telescopic rails: allow you to pull out the dish and check it without having to remove it from the oven entirely.

Tilting grill: the tilting grill can be easily unhooked to move the heating element and clean the roof of the appliance in one simple step.

Vapor Clean: a simple cleaning function using steam to loosen deposits in the oven cavity.

The capacity indicates the amount of usable space in the oven cavity in litres.

The oven cavity has 4 different cooking levels.

Electronic control: Allows you to maintain temperature inside the oven with the precision 2-3 ° C. This enables to cook meals that are very sensitive to temperature changes, such as cakes, souffles, puddings.

Ultra rapid burners: Powerful ultra rapid burners offer up to 5kw of power.

The capacity indicates the amount of usable space in the oven cavity in litres.

Benefit (TT)

Gas hob

Gas provides permanent control of the heat source and the temperature change is immediate

Equipped with a thermocouple, the gas supply is cut off if the flame is extinguished for greater safety.

Vapor Clean

By inserting water into a recess at the bottom of the cavity, steam is generated, which softens the residue and facilitates its removal

By inserting water into a recess at the bottom of the cavity, steam is generated, which softens the residue and facilitates its removal.

Buttons control

Easy and intuitive timer setting with a simple buttons

Drawer storage compartment

More space thanks to the lower drawer compartment, ideal for storing accessories or cooking utensils

True-convection

The best cooking performances guaranteed by ventilated circular flow

Multiple fans and heating elements guarantee the perfect aerodynamic heat flow, allowing homogeneous and quicker cooking inside the cavity.

Multilevel cooking

Several cooking levels allow maximum flexibility of use

Multilevel halogen light

Internal halogen lighting on different levels guarantees excellent visibility

Removalble inner glass

Internal door glasses are easily removable for complete cleaning

Tangential cooling

New cooling system with tangential fan and airflow from the door to the splashback

Telescopic guides

Easy extraction and safe insertion of trays into the oven thanks to telescopic guides

Adjustable height

Cooker top flushed with the working area thanks to adjustable feet

Cold door

During any function, the external door glass is cold, avoiding any risk of burns

AirFry (AIRFRY optional accessory)

Lighter and tastier food thanks to airfry basket (optional accessory)

BBQ (optional accessory)

Barbecue cooking directly in the oven with the double-sided grill (BBQ optional accessory)

Pizza stone (optional accessory)

Baking with refractory stone for soft and crispy pizza and yeast products (STONE optional accessory)

Isothermic Cavity

The best cooking performance at the highest energy efficiency

Single turbine

The oven has a fan equipped with a circular heating element allowing cooking with rotating heat