TR4110IP2

Cooker size	110x60 cm
N. of cavities with energy label	2
Cavity heat source	ELECTRICITY
Hob type	Induction
Type of main oven	Thermoseal
Type of second oven	Fan assisted
Cleaning system main oven	Vapour Clean
EAN code	8017709312442
Energy efficiency class	A
Energy efficiency class, second cavity	A



Aesthetics

Design	Victoria	**Controls colour**	Stainless steel
Command panel finish	Enamelled metal	**No. of controls**	10
Aesthetic	Victoria	**Serigraphy colour**	Black
Logo	assembled 50's	**Display**	electronic 5 buttons
Colour	Cream	**Door**	With frame
Logo position	Upstand	**Glass type**	Black
Finishing	Glossy	**Handle**	Smeg Victoria
Upstand	Yes	**Handle Colour**	Brushed stainless steel
Hob colour	Black enamel	**Storage compartment**	Drawer
Type of control setting	Control knobs	**Plinth**	Anthracite
Control knobs	Smeg Victoria		

Programs / Functions

No. of cooking functions 5

Traditional cooking functions

Static

Fan assisted

Circulaire

Eco

Fan assisted bottom

Other functions

Defrost by time

Cleaning functions

Vapour Clean

Programs / Functions Auxiliary Oven

Cooking functions cavity 2 6

Traditional cooking functions, cavity 2

Static | Fan assisted | Eco

Large grill | Fan grill (large) | Fan-assisted bottom

Cleaning functions cavity 2

Vapour Clean

Programs / Functions Third Oven

No. of functions third oven 1

Oven light

Full grill

Hob technical features

Total no. of cook zones 5

Front left - Induction - single - 2.3 kW - Booster 3 kW - - Ø 21.0 cm

Rear left - Induction - single - 1.3 kW - Booster 1.4 kW - - Ø 18.0 cm

Central - Induction - single - 2.3 kW - Booster 3 kW - - Ø 27.0 cm

Rear right - Induction - single - 1.3 kW - Booster 1.4 kW - - Ø 18.0 cm

Front right - Induction - single - 2.3 kW - Booster 3 kW - - Ø 21.0 cm

Automatic switch off when overheat	Yes	**Minimum pan diameter indication**	Yes
Automatic pan detection	Yes	**Selected zone indicator**	Yes

Main Oven Technical Features

No. of lights	1	**Removable inner door**	Yes
Fan number	1	**Total no. of door glasses**	3
Net volume of the cavity	61 l	**No.of thermo-reflective door glasses**	1
Gross volume, 1st cavity	70 l		
Cavity material	Ever Clean enamel	**Safety Thermostat**	Yes

No. of shelves	4
Type of shelves	Metal racks
Light type	Halogen
Light Power	40 W
Cooking time setting	Start and Stop
Door opening	Side opening
Removable door	Yes
Full glass inner door	Yes
Cooling system	Tangential
Usable cavity space dimensions (HxWxD)	316x460x412 mm
Temperature control	Electro-mechanical
Lower heating element power	1200 W
Upper heating element - Power	1000 W
Grill elememt	1700 W
Large grill - Power	2700 W
Circular heating element - Power	2700 W
Grill type	Electric

Options Main Oven

Timer	Yes
End of cooking acoustic alarm	Yes
Minimum Temperature	50 °C
Maximum temperature	260 °C

Second Oven Technical Features



Fan number	1
Net volume of the second cavity	61 l
Gross volume, 2nd cavity	70 l
Cavity material	Ever Clean enamel
No. of shelves	4
Type of shelves	Metal racks
No. of lights	1
Light type	Halogen
Light Power	40 W
Door opening	Side opening
Removable door	Yes
Full glass inner door	Yes
Removable inner door	Yes
No. total door glasses	3
No. thermo-reflective door glasses	1
Safety Thermostat	Yes
Cooling system	Tangential
Usable cavity space dimensions (HxWxD)	316x444x425 mm
Temperature control	Electro-mechanical
Lower heating element - power	1200 W
Upper heating element - Power	1000 W
Grill element - power	1700 W
Large grill - Power	2700 W
Grill type	Electric
Tilting grill	Yes

Options Auxiliary Oven

Minimum Temperature	50 °C
Maximum temperature	260 °C

Third Oven Technical Features



Net volume, 3rd cavity	36 l
Removable inner door	Yes

Gross volume, 3rd cavity	41 l	**No. total door glasses**	3
Cavity material	Ever Clean enamel	**No. of thermo-reflective door glasses**	1
No. of shelves	2	**Safety Thermostat**	Yes
Type of shelves	Metal racks	**Cooling system**	Tangential
No. of lights	1	**Usable cavity space dimensions (HxWxD)**	169x440x443 mm
Light type	Incandescent	**Temperature control**	Electro-mechanical
Light Power	25 W	**Large grill - Power**	2700 W
Door opening	Flap down	**Grill type**	Electric
Removable door	Yes	**Tilting grill**	Yes
Full glass inner door	Yes		

Options Third Oven

Minimum Temperature	50 °C	**Maximum temperature**	260 °C

Accessories included for Main Oven & Hob



Rack with back and side stop	2	**Grill mesh**	1
40mm deep tray	1	**Telescopic Guide rails, partial Extraction**	1

Accessories included for Secondary Oven



Rack with back and side stop	2	**Grill mesh**	1
40mm deep tray	1	**Telescopic Guide rails, partial Extraction**	1

Accessories included for Third Oven

Rack with back and side stop	1	**40mm deep tray**	1

Electrical Connection

Electrical connection rating	16500 W	**Power supply cable length**	150 cm
Current	46 A	**Type of electric cable**	Yes, Double and Three Phase
Voltage	220-240 V	**Frequency**	50 Hz
Voltage 2 (V)	380-415 V	**Terminal block**	5 poles
Type of electric cable installed	Yes, Single phase	**Plug**	No

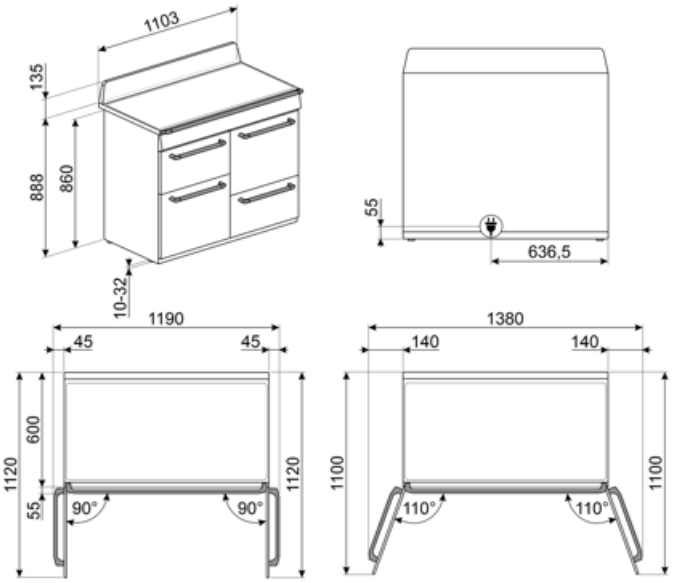
1103
135
888
860
10-32
55
636,5
1190
45
45
600
1120
1120
55
90°
90°
1380
140
140
1100
1100
110°
110°

Compatible Accessories



AIRFRY2

Air fryer tray. Ideal for recreating traditional frying in the oven, but with fewer calories and less fat. It allows you to cook quickly and simply dishes such as French fries, fried vegetables and fish, ensuring perfect browning and crispiness.



BN620-1

Enamelled tray, 20mm deep



BNP608T

Teflon-coated tray, 8mm depth, to be placed on the grid



GTP

Partially extractable telescopic guides (1 level) Extraction: 300 mm Material: Stainless steel AISI 430 polished



KIT1TR41N

Splashback 110x75 cm suitable for TR4110 Victoria cookers, black



KITH4110

Height extension kit (950 mm), suitable for TR4110 cookers



PALPZ

Pizza shovel with fold away handle width: 315mm length : 325mm



SFLK1

Child lock



TPKPLATE

Universal plate for induction, gas, ceramic and electric hobs. Non-stick surface ideal for cooking fish, eggs and vegetables. Dimensions: 410 X 240 mm.



BBQ

Double sided plate BBQ. Suitable for recreating succulent and crispy dishes in the oven with the typical taste of grilled cooking. The ribbed side is particularly suitable for meats and cheeses. The smooth side for fish, seafood and vegetables.



BN640

Enamelled tray, 40mm deep



GRILLPLATE

Universal griddle for induction, gas, ceramic and electric hobs. Non-stick surface ideal for cooking meat, cheese and vegetables. Dimensions: 410 x 240 mm.



GTT

Totally extractable telescopic guides (1 level) Extraction: 433 mm Material: Stainless steel AISI 430 polished



KIT600TR4110

Cover strip for hob back side, suitable for TR4110 Victoria cookers



KITP65TR41

Depth extension kit (650 mm), suitable for TR4110 cookers



SCRP

Induction and ceramic hobs and teppanyaki scraper

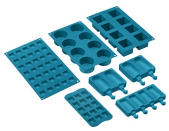

SMOLD

Set of 7 silicone moulds for ice creams, ice lollies, pralines, ice cubes or to portion food. Usable from -60°C to +230°C

Symbols glossary



Child lock: some models are fitted with a device to lock the programme/cycle so it cannot be accidentally changed.



Installation in column: Installation in column



Air cooling system: to ensure a safe surface temperatures.



Triple glazed doors: Number of glazed doors.



Enamel interior: The enamel interior of all Smeg ovens have a special antacid lining which helps keep the interior clean by reducing the amount of cooking grease adhering to it.



Fan with upper and lower elements: The elements combined with the fan aim to provide more uniform heat, a similar method to conventional cooking, so pre-heat is required. Most suitable for items requiring slow cooking methods.



Circulaire: The combination of the fan and circular element around it gives a hot air cooking method. This provides many benefits including no preheat if cook time is more than 20 minutes, no flavour transfer when cooking different foods at the same time, less energy, and shorter cook times. Good for all types of food.



Grill element: Using of grill gives excellent results when cooking meat of medium and small portions, especially when combined with a rotisserie (where possible). Also ideal for cooking sausages and bacon.



Fan with grill element: The fan reduces the fierce heat from the grill, providing an excellent method of grilling various foods, chops, steaks, sausages etc. giving even browning and heat distribution, without drying out the food. The top two levels recommended for use, and the lower part of the oven can be used to keep items warm at the same time, an excellent facility when cooking a grilled breakfast. Half grill (centre portion only) is ideal for small quantities of food.



A: Product drying performance, measured from A+++ to D / G depending on the product family



Knobs control



Defrost by time: with this function the time of thawing of foods are determined automatically.



ECO-logic: option allows you to restrict the power limit of the appliance real energy saving.



Fan assisted base: the mix of fan and lower heating element alone allows to finish cooking foods already cooked on the surface but not internally more quickly. This system is recommended to finish cooking foods that are already well cooked on the surface, but not internally, which therefore require a moderate higher heat. Ideal for any type of food.



Upper and lower element only: a traditional cooking method best suited for single items located in the centre of the oven. the top pf the oven will always be hottest. Ideal for roast, fruit cakes, bread etc.



ECO: The combination of the grill, fan and lower element is particularly suitable for cooking small quantities of food.



Grill element: Using of grill gives excellent results when cooking meat of medium and small portions, especially when combined with a rotisserie (where possible). Also ideal for cooking sausages and bacon.



Light

Overheat protection: The safety system that automatically turns off the hob in case of overheating of the control unit.

All glass inner door: All glass inner door, a single flat surface which is simple to keep clean.

Side lights: Two opposing side lights increase visibility inside the oven.

The oven cavity has 4 different cooking levels.

Electronic control: Allows you to maintain temperature inside the oven with the precision 2-3 ° C. This enables to cook meals that are very sensitive to temperature changes, such as cakes, souffles, puddings.

Vapour Clean: a simple cleaning function using steam to loosen deposits in the oven cavity.

The capacity indicates the amount of usable space in the oven cavity in litres.

Induction: The work of these hobs is based on the principle of electromagnetic induction. The heat is generated directly in the bottom of the pan during its contact with the hob.

The inner door glass: can be removed with a few quick movements for cleaning.

The oven cavity has 2 different cooking levels.

Telescopic rails: allow you to pull out the dish and check it without having to remove it from the oven entirely.

Tilting grill: the tilting grill can be easily unhooked to move the heating element and clean the roof of the appliance in one simple step.

The capacity indicates the amount of usable space in the oven cavity in litres.

Benefit (TT)

Induction hob

Induction offers fast cooking and precise temperature control

Through the use of suitable cookware, induction is easy to use and maintain, safe and responsive

Vapor Clean

By inserting water into a recess at the bottom of the cavity, steam is generated, which softens the residue and facilitates its removal

By inserting water into a recess at the bottom of the cavity, steam is generated, which softens the residue and facilitates its removal.

Buttons control

Easy and intuitive timer setting with a simple buttons

Drawer storage compartment

More space thanks to the lower compartment, ideal for storing accessories or cooking utensils

True-convection

The best cooking performances guaranteed by ventilated circular flow.

Multiple fans and heating elements guarantee the perfect aerodynamic heat flow, allowing homogeneous and quicker cooking inside the cavity.

Multilevel cooking

Several cooking levels allow maximum flexibility of use

Multilevel halogen light

Internal halogen lighting on different levels guarantees excellent visibility

Removalble inner glass

Internal door glasses are easily removable for complete cleaning

Tangential cooling

New cooling system with tangential fan and airflow from the door to the splashback

Telescopic guides

Easy extraction and safe insertion of trays into the oven thanks to telescopic guides

Adjustable height

Cooker top flushed with the working area thanks to adjustable feet

Cold door

During any function, the external door glass is cold, avoiding any risk of burns

AirFry (AIRFRY optional accessory)

Lighter and tastier food thanks to airfry basket

BBQ (optional accessory)

Barbeque cooking directly in the oven with the double-sided grill

Pizza stone (optional accessory)

Baking with refractory stone for soft and crispy pizza and yeast products (STONE optional accessory)

Isothermic Cavity

The best cooking performance at the highest energy efficiency

Single turbine

The oven has a fan equipped with a circular heating element allowing cooking with rotating heat