TR90DGME9

Cooker size	90x60 cm
N. of cavities with energy label	1
Cavity heat source	ELECTRICITY
Hob type	Gas
Type of main oven	Thermo-ventilated
Cleaning system main oven	Catalytic
EAN code	8017709335847
Energy efficiency class	A



Aesthetics

Design	Victoria	**Type of control setting hob**	Control knobs
Command panel finish	Enamelled metal	**Type of control knobs**	Smeg Victoria
Aesthetic	Victoria	**Controls colour**	Stainless steel
Logo	assembled 50's	**No. of controls**	8
Colour	Decorated / Special	**Serigraphy colour**	Silver
Logo position	Upstand+ Command panel	**Display name**	Electronic 5 buttons
Decoration / Special colour	Blu Mediterraneo	**Door**	With frame
Finishing	Glossy	**Glass type**	Black
Upstand	Yes	**Handle**	Smeg Victoria
Series	Blu Mediterraneo	**Handle Colour**	Polished chrome
Collaborations	Smeg & Dolce&Gabbana	**Storage compartment**	Drawer
Hob colour	Black enamel	**Feet color**	none
Type of pan stands	Cast Iron	**Plinth**	Anthracite

Programs / Functions main oven

No. of cooking functions	9

Traditional cooking functions

- Static
- Fan assisted
- Circulaire
- Eco
- Large grill
- Fan grill (large)
- Base
- Fan assisted base
- Rotisserie

Other functions

- Defrost by time

Cleaning functions

- Catalytic
- Vapor clean

Hob technical features

UR

Total no. of cook zones	5

Front left - Gas - Rapid - 2.90 kW
Rear left - Gas - Semi Rapid - 1.80 kW
Central - Gas - 2UR (dual) - 5.00 kW
Rear right - Gas - Semi Rapid - 1.80 kW
Front right - Gas - AUX - 1.00 kW

Type of gas burners	Standard	**Gas safety valves**	Yes
Automatic electronic ignition	Yes	**Burner caps**	Matt black enamelled

Main Oven Technical Features

No. of lights	2	**Removable inner door**	Yes
Fan number	2	**Total no. of door glasses**	3
Net volume of the cavity	115 l	**No.of thermo-reflective door glasses**	2
Gross volume, 1st cavity	129 l	**Safety Thermostat**	Yes
Cavity material	Ever Clean enamel	**Cooling system**	Tangential
No. of shelves	5	**Usable cavity space dimensions (HxWxD)**	371x724x418 mm
Type of shelves	Metal racks	**Temperature control**	Electro-mechanical
Light type	Halogen	**Lower heating element power**	1700 W
Light Power	40 W	**Upper heating element - Power**	1200 W
Cooking time setting	Start and Stop	**Grill element**	1700 W
Light when oven door is open	Yes	**Large grill - Power**	2900 W
Door opening	Flap down		
Removable door	Yes		
Full glass inner door	Yes		

Circular heating element - Power	2 x 1550 W
Grill type	Electric
Soft Close system	Yes

Options Main Oven

Timer	Yes	**Minimum Temperature**	50 °C
End of cooking acoustic alarm	Yes	**Maximum temperature**	260 °C

Accessories included for Main Oven & Hob

Cast iron wok support	1	**40mm deep tray**	1
Moka stand in cast iron	1	**Grill mesh**	1
Rack with back and side stop	1	**Catalityc panels**	3
20mm deep tray	1		

Electrical Connection

Electrical connection rating	3200 W	**Power supply cable length**	110 cm
Current	14 A	**Frequency**	50/60 Hz
Voltage	220-240 V	**Terminal block**	3 poles
Voltage 2 (V)	380-415 V	**Plug**	Not present
Electric cable	Installed, Single phase		

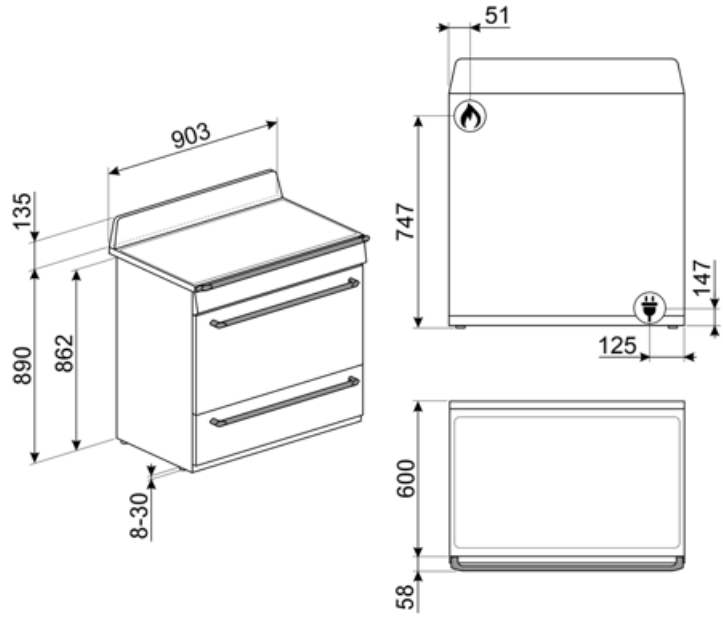
51
903
135
747
147
890
862
125
600
8-30
58

Compatible Accessories



AIRFRY9

Air fryer rack AIRFRY . Ideal for recreating traditional frying in the oven, but with fewer calories and less fat. It allows you to cook quickly and simply dishes such as French fries, fried vegetables and fish, ensuring perfect browning and crispiness.



BBQ9

teflon-coated aluminum grid for 90 cm cavity



BN920

Enamelled tray 90cm cavity, 20mm deep



BN940

Enamelled tray 90 cm, 40 mm deep



GTP

Partially extractable telescopic guides (1 level), suitable for traditional ovens. Made in stainless steel, they guarantee stability and facilitate the smooth extraction of the trays.



GTT

Totally extractable telescopic guides (1 level), suitable for traditional ovens. Made in stainless steel, they guarantee stability and facilitate the smooth extraction of the trays.



KIT1TR9N

Splashback black, 90cm ,suitable for TR90 and TR93 Victoria cookers



KITROT9

Rotisserie kit for 90x60 cookers, new cavity (115 L)



PALPZ

Pizza shovel with folding handle. Dimensions L31.5 x H32.5 cm. Easy and convenient to use and store. Perfect for serving pizza, bread and savory pastries in a safe and professional way.



SFLK1

Child lock

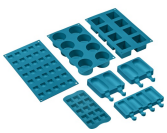

SMOLD

Set of 7 silicone moulds for ice creams, ice lollies, pralines, ice cubes or to portion food. Usable from -60°C to +230°C

Symbols glossary



Heavy duty cast iron pan stands: for maximum stability and strength.



Energy efficiency class A



Air cooling system: to ensure a safe surface temperatures.



Triple glazed doors: Number of glazed doors.



Fan assisted base: the mix of fan and lower heating element alone allows to finish cooking foods already cooked on the surface but not internally more quickly. This system is recommended to finish cooking foods that are already well cooked on the surface, but not internally, which therefore require a moderate higher heat. Ideal for any type of food.



Static: Traditional cooking suitable for the preparation of one dish at a time. The fan is not active and the heat comes from below and from above at the same time. Static cooking is slower and more delicate, ideal in order to get well cooked and dry dishes even inside. Ideal for cooking all types of roasts, fatty meats, bread, filled cakes.



Circulaire: it is the perfect function for cooking all types of dishes in a more delicate way. The heat comes from the back of the oven and is distributed quickly and evenly. The fan is active. It is also ideal for cooking on multiple levels without mixing smells and flavors.



Catalytic cleaning: the system ensures perfect hygiene inside the oven thanks to the three self-cleaning panels coated with a special enamel that promotes the progessive elimination of traces of grease and odors caused by cooking.



Installation in column: Installation in column.



Defrost by time: Manual defrost function. At the end of the set duration, the function stops.



Ever Clean Enamel: Ever Clean enamel is applied electrostatically, corner to corner and edge to edge to prevent cracking or cracks over time. It is a particular pyrolytic enamel, resistant to acids which, in addition to being pleasantly bright, promotes greater cleaning of the oven walls, thanks to its lower porosity. It is baked at over 850 °C and slowly polymerized at a scientifically determined rate to ensure uniform depth and strength. Ever Clean enamel creates an impeccable finish both on the inside of the oven and on the trays, making the surfaces of the oven incredibly easy to maintain over time as it reduces the adhesion of fat during cooking.



Fan assisted: Intense and homogeneous traditional cooking, also suitable for complex recipes. The fan is active and the heat comes from below and from above at the same time. Ventilated cooking ensures a faster and more homogeneous result, leaving fragrant foods outside and moister inside. Ideal for baked pasta, biscuits, roasts and cobblers.



Base: the heat comes only from the bottom of the cavity. The fan is not active. Ideal for sweet and savory pies, cobblers and pizzas. Designed to complete cooking and make food more crunchy. This symbol in gas ovens indicates the gas burner.



ECO: low energy consumption cooking: this function is particularly suitable for cooking on a single shelf with low energy consumption. It is recommended for all types of food except those that can generate a lot of moisture (for example vegetables). To achieve maximum energy savings and reduce time, it is recommended to put the food in the oven without preheating the cooking compartment.

Grill: Very intense heat coming only from above from a double heating element. The fan is not active. Provides excellent grilling and gratinating results. Used at the end of cooking, it gives a uniform browning to dishes.

Fan grill: very intense heat coming only from above from a double heating element. The fan is active. It allows the optimal grilling of thickest meats. Ideal for large cuts of meat.

Rotisserie: The rotisserie (where installed) works in combination with the grill element to brown foods to perfection.

All glass inner door: All glass inner door, a single flat surface which is simple to keep clean.

The inner door glass: can be removed with a few quick movements for cleaning.

Side lights: Two opposing side lights increase visibility inside the oven.

Automatic opening: some models have Automatic opening door when the cycle is finished which is a perfect solution for handle-less kitchen units as no handle is needed. For safety reasons, the door locks automatically when the machine is in use to avoid it being opened inadvertently.

The oven cavity has 5 different cooking levels.

Soft close: all models are equipped with advanced function of smooth closing of the door, which allows the device to close smoothly and quietly.

Ultra rapid burners: Powerful ultra rapid burners offer up to 5kw of power.

Vapor Clean: a simple cleaning function using steam to loosen deposits in the oven cavity.

The capacity indicates the amount of usable space in the oven cavity in litres.

Knobs control