TR90IP2

Cooker size	90x60 cm
N. of cavities with energy label	1
Cavity heat source	Electric
Hob type	Induction
Type of main oven	Thermo-ventilated
Cleaning system main oven	Vapor Clean
EAN code	8017709312480
Energy efficiency class	A



Aesthetics

Design	Victoria	**No. of controls**	7
Command panel finish	Enamelled metal	**Serigraphy colour**	Black
Aesthetics	Victoria	**Display**	electronic 5 buttons
Logo	assembled 50's	**Door**	With frame
Colour	Cream	**Glass type**	Black
Logo position	Upstand+ Command panel	**Handle**	Smeg Victoria
Finishing	Gloss	**Handle Colour**	Polished chrome
Upstand	Yes	**Storage compartment**	Drawer
Hob colour	Black enamel	**Sliding compartment**	Yes
Type of control setting	Control knobs	**Feet**	none
Control knobs	Smeg Victoria	**Plinth**	Anthracite
Controls colour	Stainless steel		

Programs / Functions

No. of cooking functions 9

Traditional cooking functions

- Static
- Fan assisted
- Circulaire
- ECO
- Small grill
- Large grill
- Fan grill (large)
- Base
- Fan assisted base

Other functions

Defrost by time

Cleaning functions

Catalytic

Vapor Clean

Hob options

Control lock	Yes
Limited Power Consumption Mode	Yes
Limited Power Consumption Mode in W	3700, 4800, 7400 W

Hob technical features

Total no. of cook zones 5

Front left - Induction - single - 1.30 kW - Booster 1.40 kW - Ø 18.0 cm

Rear left - Induction - single - 2.30 kW - Booster 3.00 kW - Ø 21.0 cm

Central - Induction - single - 2.30 kW - Booster 3.00 kW - Ø 27.0 cm

Rear right - Induction - single - 1.30 kW - Booster 1.40 kW - Ø 18.0 cm

Front right - Induction - single - 2.30 kW - Booster 3.00 kW - Ø 21.0 cm

Automatic switch off when overheat	Yes
Automatic pan detection	Yes
Minimum pan diameter indication	Yes
Selected zone indicator	Yes

Main Oven Technical Features

No. of lights	2
Fan number	2
Net volume of the cavity	115 litres
Gross volume, 1st cavity	129 l
Cavity material	Easy clean enamel
Shelf positions	5
Type of shelves	Metal racks
Light type	Halogen
Light power	40 W
Cooking time setting	Start and Stop
Light when oven door is open	Yes
Door opening	Flap down
Removable door	Yes
Full glass inner door	Yes
Removable inner door	Yes
Total no. of door glasses	3
No.of thermo-reflective door glasses	2
Safety Thermostat	Yes
Cooling system	Tangential
Usable cavity space dimensions (HxWxD)	371x724x418 mm
Temperature control	Electro-mechanical
Lower heating element power	1700 W
Upper heating element - Power	1200 W
Grill elememt	1700 W
Large grill - Power	2900 W

Circular heating element - Power	1550 W
Grill type	Electric
Soft Close system	Yes

Options Main Oven

Timer	Yes	**Minimum Temperature**	50 °C
End of cooking acoustic alarm	Yes	**Maximum temperature**	260 °C

Accessories included for Main Oven & Hob

Chrome shelf with back and side stop	1	**Grill mesh**	1
20mm deep tray	1	**Catalityc panels**	3
40mm deep tray	1		

Electrical Connection

Max Power Draw	10600 W	**Additional connection modalities**	Yes, Double and Three Phase
Current	46 A	**Frequency**	50/60 Hz
Voltage	220-240 V	**Terminal block**	5 poles
Voltage 2 (V)	380-415 V	**Plug**	No
Type of electric cable	Yes, Single phase		

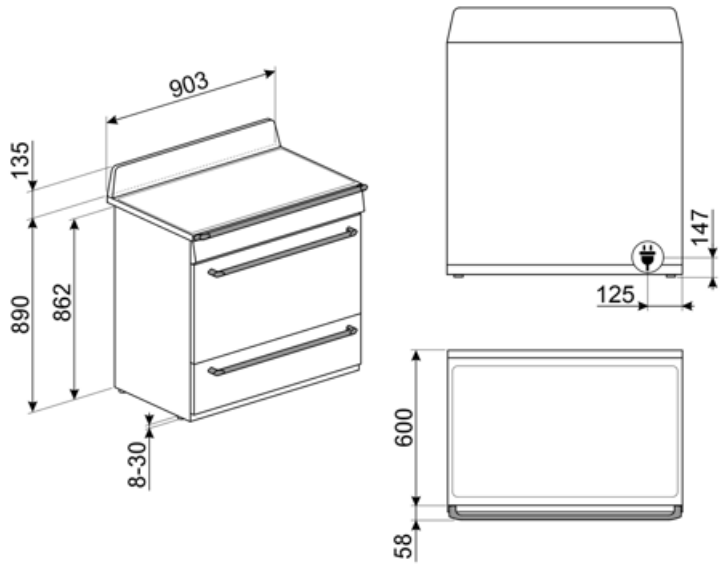

Compatible Accessories



AIRFRY9

Air fryer rack AIRFRY . Ideal for recreating traditional frying in the oven, but with fewer calories and less fat. It allows you to cook quickly and simply dishes such as French fries, fried vegetables and fish, ensuring perfect browning and crispiness.



BN920

Enamelled tray 90cm cavity, 20mm deep



GRILLPLATE

Universal griddle for induction, gas, ceramic and electric hobs. Non-stick surface ideal for cooking meat, cheese and vegetables. Dimensions: 410 x 240 mm.



GTT

Totally extractable telescopic guides (1 level) Extraction: 433 mm Material: Stainless steel AISI 430 polished



PALPZ

Pizza shovel with fold away handle width: 315mm length : 325mm

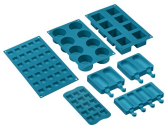

SMOLD

Set of 7 silicone moulds for ice creams, ice lollies, pralines, ice cubes or to portion food. Usable from -60°C to +230°C



BBQ9

teflon-coated aluminum grid for 90 cm cavity



BN940

Enamelled tray 90 cm, 40 mm deep



GTP

Partially extractable telescopic guides (1 level) Extraction: 300 mm Material: Stainless steel AISI 430 polished



KIT1TR9N

Splashback, 90x75 cm suitable for TR9 Victoria cookers, black



SCRP

Induction and ceramic hobs and teppanyaki scraper



TPKPLATE

Universal plate for induction, gas, ceramic and electric hobs. Non-stick surface ideal for cooking fish, eggs and vegetables. Dimensions: 410 X 240 mm.

Symbols glossary



Child lock: some models are fitted with a device to lock the programme/cycle so it cannot be accidentally changed.



Installation in column: Installation in column



Defrost by time: with this function the time of thawing of foods are determined automatically.



ECO-logic: option allows you to restrict the power limit of the appliance real energy saving.



Fan assisted base: the mix of fan and lower heating element alone allows to finish cooking foods already cooked on the surface but not internally more quickly. This system is recommended to finish cooking foods that are already well cooked on the surface, but not internally, which therefore require a moderate higher heat. Ideal for any type of food.



Upper and lower element only: a traditional cooking method best suited for single items located in the centre of the oven. the top pf the oven will always be hottest. Ideal for roast, fruit cakes, bread etc.



Circulaire: The combination of the fan and circular element around it gives a hot air cooking method. This provides many benefits including no preheat if cook time is more than 20 minutes, no flavour transfer when cooking different foods at the same time, less energy, and shorter cook times. Good for all types of food.



Grill element: Using of grill gives excellent results when cooking meat of medium and small portions, especially when combined with a rotisserie (where possible). Also ideal for cooking sausages and bacon.



Fan with grill element: The fan reduces the fierce heat from the grill, providing an excellent method of grilling various foods, chops, steaks, sausages etc. giving even browning and heat distribution, without drying out the food. The top two levels recommended for use, and the lower part of the oven can be used to keep items warm at the same time, an excellent facility when cooking a grilled breakfast. Half grill (centre portion only) is ideal for small quantities of food.



A: Product drying performance, measured from A+++ to D / G depending on the product family



Air cooling system: to ensure a safe surface temperatures.



Triple glazed doors: Number of glazed doors.



Enamel interior: The enamel interior of all Smeg ovens have a special antacid lining which helps keep the interior clean by reducing the amount of cooking grease adhering to it.



Fan with upper and lower elements: The elements combined with the fan aim to provide more uniform heat, a similar method to conventional cooking, so pre-heat is required. Most suitable for items requiring slow cooking methods.



Lower heating element only: This function is ideal for foods that require extra base temperature without browning, e.g. pastry dishes, pizza. Also suitable for slow cooking of stews and casseroles.



ECO: The combination of the grill, fan and lower element is particularly suitable for cooking small quantities of food.



Half grill: For rapid cooking and browning of foods. Best results can be obtained by using the top shelf for small items, the lower shelves for larger ones, such as chops or sausages. For half grill heat is generated only at the centre of the element, so is ideal for smaller quantities.



Overheat protection: The safety system that automatically turns off the hob in case of overheating of the control unit.

Induction: The work of these hobs is based on the principle of electromagnetic induction. The heat is generated directly in the bottom of the pan during its contact with the hob.

The inner door glass: can be removed with a few quick movements for cleaning.

Automatic opening: some models have Automatic opening door when the cycle is finished which is a perfect solution for handle-less kitchen units as no handle is needed. For safety reasons, the door locks automatically when the machine is in use to avoid it being opened inadvertently.

Soft close: all models are equipped with advanced function of smooth closing of the door, which allows the device to close smoothly and quietly.



The capacity indicates the amount of usable space in the oven cavity in litres.

All glass inner door: All glass inner door, a single flat surface which is simple to keep clean.

Side lights: Two opposing side lights increase visibility inside the oven.



The oven cavity has 5 different cooking levels.

Vapor Clean: a simple cleaning function using steam to loosen deposits in the oven cavity.

Knobs control