TR90IPBL

Cooker size	90x60 cm
N. of cavities with energy label	1
Cavity heat source	ELECTRICITY
Hob type	Induction
Type of main oven	Thermoseal
Cleaning system main oven	Pyrolitic
EAN code	8017709344894
Energy efficiency class	A+



Aesthetics

Design	Victoria	**Controls colour**	Stainless steel
Command panel finish	Enamelled metal	**No. of controls**	8
Aesthetic	Victoria	**Serigraphy colour**	Silver
Logo	assembled 50's	**Display**	electronic 5 buttons
Colour	Black	**Door**	With frame
Logo position	Upstand+ Command panel	**Glass type**	Black
Finishing	Glossy	**Handle**	Smeg Victoria
Upstand	Yes	**Handle Colour**	Polished chrome
Hob colour	Black enamel	**Storage compartment**	Push pull
Type of control setting	Control knobs	**Feet**	none
Control knobs	Smeg Victoria	**Plinth**	Anthracite

Programs / Functions

No. of cooking functions 9

Traditional cooking functions

- Static
- Fan assisted
- Circulaire
- Turbo
- Eco
- Small grill
- Large grill
- Fan grill (large)
- Fan assisted bottom

Cleaning functions

 Pyrolytic

Hob options



Control lock	Yes

Hob technical features

Total no. of cook zones 5

Front left - Induction - single - 2.30 kW - Booster 3.00 kW - Ø 21.0 cm
Rear left - Induction - single - 1.30 kW - Booster 1.40 kW - Ø 18.0 cm
Central - Induction - single - 2.30 kW - Booster 3.00 kW - Ø 27.0 cm
Rear right - Induction - single - 1.30 kW - Booster 1.40 kW - Ø 18.0 cm
Front right - Induction - single - 2.30 kW - Booster 3.00 kW - Ø 21.0 cm

Type of gas burners	Standard	**Gas safety valves**	Yes
Automatic electronic ignition	Yes	**Burner caps**	Matte black enamelled

Main Oven Technical Features



No. of lights	2	**Total no. of door glasses**	4
Fan number	2	**No.of thermo-reflective door glasses**	2
Net volume of the cavity	115 l	**Safety Thermostat**	Yes
Gross volume, 1st cavity	129 l	**Cooling system**	Tangential
Cavity material	Ever Clean enamel	**Door Lock During Pyrolisis**	Yes
No. of shelves	5	**Usable cavity space dimensions (HxWxD)**	371x724x418 mm
Type of shelves	Metal racks	**Temperature control**	Electro-mechanical
Light type	Halogen	**Lower heating element power**	1700 W
Light Power	40 W	**Upper heating element - Power**	1200 W
Cooking time setting	Start and Stop	**Grill elememt**	1700 W
Light when oven door is open	Yes	**Large grill - Power**	2900 W
Door opening	Flap down	**Circular heating element - Power**	2 x 2000 W
Removable door	Yes	**Grill type**	Electric
Full glass inner door	Yes	**Soft Close system**	Yes
Removable inner door	Yes		

Options Main Oven

Timer	Yes	**Minimum Temperature**	50 °C
End of cooking acoustic alarm	Yes	**Maximum temperature**	260 °C

Accessories included for Main Oven & Hob

Rack with back and side stop	1	**Grill mesh**	1
20mm deep tray	1	**Telescopic Guide rails, partial Extraction**	1
40mm deep tray	1		

Electrical Connection

Electrical connection rating	11600 W	**Type of electric cable**	Yes, Double and Three Phase
Current	51 A	**Frequency**	50/60 Hz
Voltage	220-240 V	**Terminal block**	5 poles
Voltage 2 (V)	380-415 V	**Plug**	(I) Australia
Type of electric cable installed	Yes, Single phase		

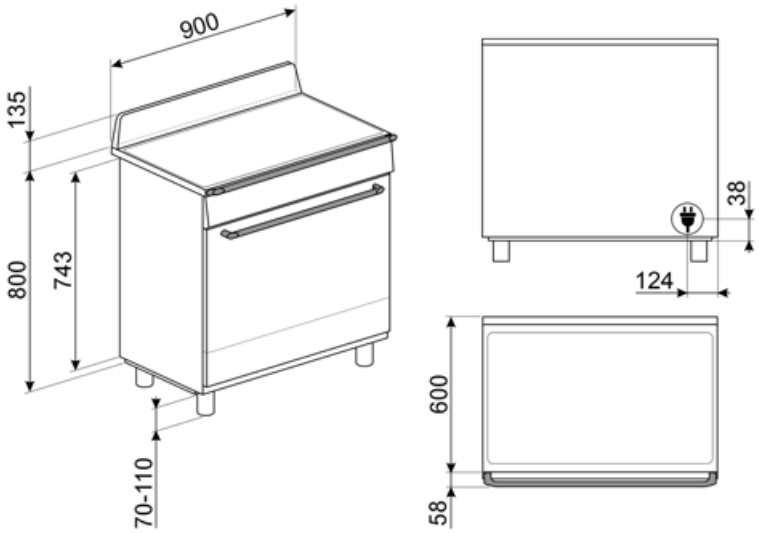

Compatible Accessories



AIRFRY9

Air fryer rack AIRFRY . Ideal for recreating traditional frying in the oven, but with fewer calories and less fat. It allows you to cook quickly and simply dishes such as French fries, fried vegetables and fish, ensuring perfect browning and crispiness.



BBQ9

teflon-coated aluminum grid for 90 cm cavity



BN920

Enamelled tray 90cm cavity, 20mm deep



BN940

Enamelled tray 90 cm, 40 mm deep



GTP

Partially extractable telescopic guides (1 level) Extraction: 300 mm Material: Stainless steel AISI 430 polished



GTT

Totally extractable telescopic guides (1 level) Extraction: 433 mm Material: Stainless steel AISI 430 polished



KIT1TR9N

Splashback, 90x75 cm suitable for TR9 Victoria cookers, black

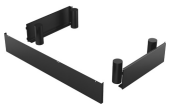

KITH95CPF9

Height extension kit (950 mm), suitable for Portofino cookers



PALPZ

Pizza shovel with fold away handle width: 315mm length : 325mm



SCRP

Induction and ceramic hobs and teppanyaki scraper



SFLK1

Child lock

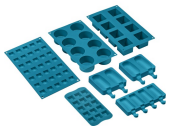

SMOLD

Set of 7 silicone moulds for ice creams, ice lollies, pralines, ice cubes or to portion food. Usable from -60°C to +230°C

Alternative products



TR90IPP

Colour: Cream



TR90IPGR

Colour: Slate Grey

Symbols glossary



Child lock: some models are fitted with a device to lock the programme/cycle so it cannot be accidentally changed.



A+: Energy efficiency class A+ helps to save up to 10% energy compared to class A. Maximum performance with minimum consumption is guaranteed.



Installation in column: Installation in column



Knobs control



Air cooling system: to ensure a safe surface temperatures.



Quadruple glazed: Number of glazed doors.



Enamel interior: The enamel interior of all Smeg ovens have a special antacid lining which helps keep the interior clean by reducing the amount of cooking grease adhering to it.



Fan assisted base: the mix of fan and lower heating element alone allows to finish cooking foods already cooked on the surface but not internally more quickly. This system is recommended to finish cooking foods that are already well cooked on the surface, but not internally, which therefore require a moderate higher heat. Ideal for any type of food.



Fan with upper and lower elements: The elements combined with the fan aim to provide more uniform heat, a similar method to conventional cooking, so pre-heat is required. Most suitable for items requiring slow cooking methods.



Upper and lower element only: a traditional cooking method best suited for single items located in the centre of the oven. the top pf the oven will always be hottest. Ideal for roast, fruit cakes, bread etc.



Circulaire: The combination of the fan and circular element around it gives a hot air cooking method. This provides many benefits including no preheat if cook time is more than 20 minutes, no flavour transfer when cooking different foods at the same time, less energy, and shorter cook times. Good for all types of food.



ECO: The combination of the grill, fan and lower element is particularly suitable for cooking small quantities of food.



Grill element: Using of grill gives excellent results when cooking meat of medium and small portions, especially when combined with a rotisserie (where possible). Also ideal for cooking sausages and bacon.



Half grill: For rapid cooking and browning of foods. Best results can be obtained by using the top shelf for small items, the lower shelves for larger ones, such as chops or sausages. For half grill heat is generated only at the centre of the element, so is ideal for smaller quantities.



Fan with grill element: The fan reduces the fierce heat from the grill, providing an excellent method of grilling various foods, chops, steaks, sausages etc. giving even browning and heat distribution, without drying out the food. The top two levels recommended for use, and the lower part of the oven can be used to keep items warm at the same time, an excellent facility when cooking a grilled breakfast. Half grill (centre portion only) is ideal for small quantities of food.



Circulaire with upper and lower elements: The use of the fan with both elements allows food to be cooked quickly and effectively, ideal for large joints that require thorough cooking. It offers a similar result to rotisserie, moving the heat around the food, instead of moving the food itself, enabling any size or shape to be cooked.

Induction: The work of these hobs is based on the principle of electromagnetic induction. The heat is generated directly in the bottom of the pan during its contact with the hob.

The inner door glass: can be removed with a few quick movements for cleaning.

Automatic opening: some models have Automatic opening door when the cycle is finished which is a perfect solution for handle-less kitchen units as no handle is needed. For safety reasons, the door locks automatically when the machine is in use to avoid it being opened inadvertently.

The oven cavity has 5 different cooking levels.

Telescopic rails: allow you to pull out the dish and check it without having to remove it from the oven entirely.

All glass inner door: All glass inner door, a single flat surface which is simple to keep clean.

Side lights: Two opposing side lights increase visibility inside the oven.

Pyrolitic: Pyrolitic cleaning cycles can be selected as necessary to automatically clean the oven interior.

Soft close: all models are equipped with advanced function of smooth closing of the door, which allows the device to close smoothly and quietly.

The capacity indicates the amount of usable space in the oven cavity in litres.