TR90P9

Cooker size	90x60 cm
N. of cavities with energy label	1
Cavity heat source	ELECTRICITY
Hob type	Gas
Type of main oven	Thermo-ventilated
Cleaning system main oven	Catalytic
EAN code	8017709230791
Energy efficiency class	A



Aesthetics

Design	Victoria	**No. of controls**	8
Command panel finish	Enamelled metal	**Serigraphy colour**	Black
Aesthetic	Victoria	**Display name**	Electronic 5 buttons
Logo	assembled 50's	**Door**	With frame
Colour	Cream	**Glass type**	Black
Logo position	Upstand+ Command panel	**Handle**	Smeg Victoria
Upstand	Yes	**Handle Colour**	Polished chrome
Hob colour	Black enamel	**Storage compartment**	Drawer
Type of pan stands	Cast Iron	**Sliding compartment**	Yes
Type of control setting hob	Control knobs	**Feet color**	none
		Plinth	Anthracite
Type of control knobs	Smeg Victoria		
Controls colour	Stainless steel		

Programs / Functions main oven

No. of cooking functions 9

Traditional cooking functions

- Static
- Fan assisted
- Circulaire
- Eco
- Large grill
- Fan grill (large)
- Base
- Fan assisted base
- Rotisserie

Other functions

Defrost by time

Cleaning functions

Catalytic

Vapor clean

Hob technical features

UR

Total no. of cook zones 5

Front left - Gas - Rapid - 2.90 kW
Rear left - Gas - Semi Rapid - 1.80 kW
Central - Gas - 2UR (dual) - 5.00 kW
Rear right - Gas - Semi Rapid - 1.80 kW
Front right - Gas - AUX - 1.00 kW

Type of gas burners	Standard	**Gas safety valves**	Yes
Automatic electronic ignition	Yes	**Burner caps**	Matt black enamelled

Main Oven Technical Features

No. of lights	2	**Total no. of door glasses**	3
Fan number	2	**No.of thermo-reflective door glasses**	2
Net volume of the cavity	115 l	**Safety Thermostat**	Yes
Gross volume, 1st cavity	129 l	**Cooling system**	Tangential
Cavity material	Ever Clean enamel	**Usable cavity space dimensions (HxWxD)**	371x724x418 mm
No. of shelves	5	**Temperature control**	Electro-mechanical
Type of shelves	Metal racks	**Lower heating element power**	1700 W
Light type	Halogen	**Upper heating element - Power**	1200 W
Light Power	40 W	**Grill element**	1700 W
Cooking time setting	Start and Stop	**Large grill - Power**	2900 W
Light when oven door is open	Yes	**Circular heating element - Power**	2 x 1550 W
Door opening	Flap down	**Grill type**	Electric
Removable door	Yes	**Tilting grill**	Yes
Full glass inner door	Yes	**Soft Close system**	Yes
Removable inner door	Yes		

Options Main Oven

Timer	Yes	**Minimum Temperature**	50 °C
		Maximum temperature	260 °C

End of cooking acoustic alarm	Yes

Accessories included for Main Oven & Hob

Cast iron wok support	1	**40mm deep tray**	1
Moka stand in cast iron	1	**Grill mesh**	1
Rack with back and side stop	1	**Catalityc panels**	3
20mm deep tray	1		

Electrical Connection

Electrical connection rating	3200 W	**Frequency**	50/60 Hz
Current	14 A	**Terminal block**	3 poles
Voltage	220-240 V	**Plug**	Not present
Power supply cable length	120 cm		

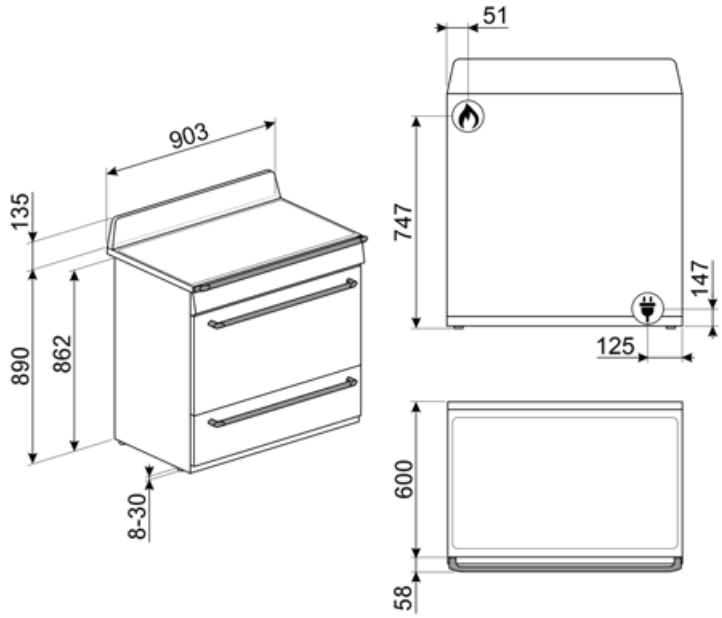

Compatible Accessories



AIRFRY9

Air fryer rack AIRFRY . Ideal for recreating traditional frying in the oven, but with fewer calories and less fat. It allows you to cook quickly and simply dishes such as French fries, fried vegetables and fish, ensuring perfect browning and crispiness.



BBQ9

teflon-coated aluminum grid for 90 cm cavity



BN920

Enamelled tray 90cm cavity, 20mm deep



BN940

Enamelled tray 90 cm, 40 mm deep



GTP

Partially extractable telescopic guides (1 level), suitable for traditional ovens. Made in stainless steel, they guarantee stability and facilitate the smooth extraction of the trays.



GTT

Totally extractable telescopic guides (1 level), suitable for traditional ovens. Made in stainless steel, they guarantee stability and facilitate the smooth extraction of the trays.



KIT1TR9N

Splashback black, 90cm ,suitable for TR90 and TR93 Victoria cookers



KITROT9

Rotisserie kit for 90x60 cookers, new cavity (115 L)



PALPZ

Pizza shovel with folding handle. Dimensions L31.5 x H32.5 cm. Easy and convenient to use and store. Perfect for serving pizza, bread and savory pastries in a safe and professional way.

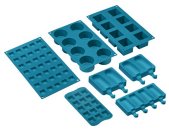

SMOLD

Set of 7 silicone moulds for ice creams, ice lollies, pralines, ice cubes or to portion food. Usable from -60°C to +230°C

Symbols glossary



Heavy duty cast iron pan stands: for maximum stability and strength.



Energy efficiency class A



Knobs control



Defrost by time: Manual defrost function. At the end of the set duration, the function stops.



Ever Clean Enamel: Ever Clean enamel is applied electrostatically, corner to corner and edge to edge to prevent cracking or cracks over time. It is a particular pyrolytic enamel, resistant to acids which, in addition to being pleasantly bright, promotes greater cleaning of the oven walls, thanks to its lower porosity. It is baked at over 850 °C and slowly polymerized at a scientifically determined rate to ensure uniform depth and strength. Ever Clean enamel creates an impeccable finish both on the inside of the oven and on the trays, making the surfaces of the oven incredibly easy to maintain over time as it reduces the adhesion of fat during cooking.



Fan assisted: Intense and homogeneous traditional cooking, also suitable for complex recipes. The fan is active and the heat comes from below and from above at the same time. Ventilated cooking ensures a faster and more homogeneous result, leaving fragrant foods outside and moister inside. Ideal for baked pasta, biscuits, roasts and cobblers.



Base: the heat comes only from the bottom of the cavity. The fan is not active. Ideal for sweet and savory pies, cobblers and pizzas. Designed to complete cooking and make food more crunchy. This symbol in gas ovens indicates the gas burner.



ECO: low energy consumption cooking: this function is particularly suitable for cooking on a single shelf with low energy consumption. It is recommended for all types of food except those that can generate a lot of moisture (for example vegetables). To achieve maximum energy savings and reduce time, it is recommended to put the food in the oven without preheating the cooking compartment.



Catalytic cleaning: the system ensures perfect hygiene inside the oven thanks to the three self-cleaning panels coated with a special enamel that promotes the progessive elimination of traces of grease and odors caused by cooking.



Installation in column: Installation in column.



Air cooling system: to ensure a safe surface temperatures.



Triple glazed doors: Number of glazed doors.



Fan assisted base: the mix of fan and lower heating element alone allows to finish cooking foods already cooked on the surface but not internally more quickly. This system is recommended to finish cooking foods that are already well cooked on the surface, but not internally, which therefore require a moderate higher heat. Ideal for any type of food.



Static: Traditional cooking suitable for the preparation of one dish at a time. The fan is not active and the heat comes from below and from above at the same time. Static cooking is slower and more delicate, ideal in order to get well cooked and dry dishes even inside. Ideal for cooking all types of roasts, fatty meats, bread, filled cakes.



Circulaire: it is the perfect function for cooking all types of dishes in a more delicate way. The heat comes from the back of the oven and is distributed quickly and evenly. The fan is active. It is also ideal for cooking on multiple levels without mixing smells and flavors.



Grill: Very intense heat coming only from above from a double heating element. The fan is not active. Provides excellent grilling and gratinating results. Used at the end of cooking, it gives a uniform browning to dishes.

Fan grill: very intense heat coming only from above from a double heating element. The fan is active. It allows the optimal grilling of thickest meats. Ideal for large cuts of meat.

Rotisserie: The rotisserie (where installed) works in combination with the grill element to brown foods to perfection.



All glass inner door: All glass inner door, a single flat surface which is simple to keep clean.



The inner door glass: can be removed with a few quick movements for cleaning.



Side lights: Two opposing side lights increase visibility inside the oven.



Automatic opening: some models have Automatic opening door when the cycle is finished which is a perfect solution for handle-less kitchen units as no handle is needed. For safety reasons, the door locks automatically when the machine is in use to avoid it being opened inadvertently.



The oven cavity has 5 different cooking levels.



Soft close: all models are equipped with advanced function of smooth closing of the door, which allows the device to close smoothly and quietly.



Tilting grill: the tilting grill can be easily unhooked to move the heating element and clean the roof of the appliance in one simple step.



Ultra rapid burners: Powerful ultra rapid burners offer up to 5kw of power.



Vapor Clean: a simple cleaning function using steam to loosen deposits in the oven cavity.



The capacity indicates the amount of usable space in the oven cavity in litres.