TR93IP

Cooker size	90x60 cm
N. of cavities with energy label	2
Cavity heat source	ELECTRICITY
Hob type	Induction
Type of main oven	Thermo-ventilated
Type of second oven	Thermo-ventilated
Cleaning system main oven	Vapor Clean
EAN code	8017709196172
Energy efficiency class	A
Energy efficiency class, second cavity	B



Aesthetics

Design	Victoria	**Controls colour**	Stainless steel
Command panel finish	Enamelled metal	**No. of controls**	9
Aesthetic	Victoria	**Serigraphy colour**	Black
Logo	assembled 50's	**Display name**	Electronic 5 buttons
Colour	Cream	**Door**	With frame
Logo position	Upstand+ Command panel	**Glass type**	Black
Upstand	Yes	**Handle**	Smeg Victoria
Hob colour	Black enamel	**Handle Colour**	Brushed stainless steel
Type of control knobs	Smeg Victoria	**Plinth**	Anthracite

Programs / Functions main oven

No. of cooking functions 8

Traditional cooking functions

- Static
- Circulaire
- Turbo
- Eco
- Small grill
- Large grill
- Fan grill (large)
- Fan assisted base

Other functions

- Defrost by time

Cleaning functions

 Vapor clean

Programs / Functions auxiliary oven

Cooking functions cavity 2	1

Traditional cooking functions, cavity 2

 Circulaire

Programs / Functions third oven

No. of functions third oven	1
Oven light	
Full grill	

Hob technical features



Total no. of cook zones 5

Front left - Induction - single - 1.30 kW - Booster 1.40 kW - Ø 18.0 cm
Rear left - Induction - single - 2.30 kW - Booster 3.00 kW - Ø 21.0 cm
Central - Induction - single - 2.30 kW - Booster 3.00 kW - Ø 27.0 cm
Rear right - Induction - single - 1.30 kW - Booster 1.40 kW - Ø 18.0 cm
Front right - Induction - single - 2.30 kW - Booster 3.00 kW - Ø 21.0 cm

Automatic switch off when overheat	Yes	**Minimum pan diameter indication**	Yes
Automatic pan detection	Yes	**Selected zone indicator**	Yes

Main Oven Technical Features



No. of lights	1	**Total no. of door glasses**	3
Fan number	1	**No.of thermo-reflective door glasses**	1
Net volume of the cavity	61 l	**Safety Thermostat**	Yes
Gross volume, 1st cavity	70 l	**Cooling system**	Tangential
Cavity material	Ever Clean enamel	**Usable cavity space dimensions (HxWxD)**	316x460x412 mm
No. of shelves	4	**Temperature control**	Electro-mechanical
Type of shelves	Metal racks	**Lower heating element power**	1200 W
Light type	Halogen	**Upper heating element - Power**	1000 W
Light Power	40 W		
Cooking time setting	Start and Stop		
Door opening	Side opening		

Removable door	Yes	**Grill element**	1700 W
Full glass inner door	Yes	**Large grill - Power**	2700 W
Removable inner door	Yes	**Circular heating element - Power**	2000 W
		Grill type	Electric
		Tilting grill	Yes

Options Main Oven

Timer	Yes	**Minimum Temperature**	50 °C
End of cooking acoustic alarm	Yes	**Maximum temperature**	260 °C

Second Oven Technical Features



Net volume of the second cavity	62 l	**Full glass inner door**	Yes
Gross volume, 2nd cavity	69 l	**Removable inner door**	Yes
Cavity material	Ever Clean enamel	**No. total door glasses**	2
No. of shelves	9	**No. thermo-reflective door glasses**	1
Type of shelves	Metal racks	**Safety Thermostat**	Yes
No. of lights	1	**Cooling system**	Tangential
Light type	Halogen	**Usable cavity space dimensions (HxWxD)**	605x275x370 mm
Light Power	40 W	**Temperature control**	Electro-mechanical
Door opening	Side opening	**Circular heating element - Power**	2500 W
Removable door	Yes	**Grill type**	Electric

Options Auxiliary Oven

Minimum Temperature	50 °C	**Maximum temperature**	245 °C

Third Oven Technical Features



Net volume, 3rd cavity	36 l	**Removable inner door**	Yes
Gross volume, 3rd cavity	41 l	**No. total door glasses**	3
Cavity material	Ever Clean enamel	**No. of thermo-reflective door glasses**	1
No. of shelves	2	**Safety Thermostat**	Yes
Type of shelves	Metal racks	**Cooling system**	Tangential
No. of lights	1	**Usable cavity space dimensions (HxWxD)**	169x440x443 mm
Light type	Halogen	**Temperature control**	Electro-mechanical
Light Power	40 W	**Large grill - Power**	2700 W
Door opening	Flap down	**Grill type**	Electric
Removable door	Yes		

Full glass inner door	Yes	**Tilting grill**	Yes

Options Third Oven

Minimum Temperature	50 °C	**Maximum temperature**	260 °C

Accessories included for Main Oven & Hob



Rack with back and side stop	2	**Grill mesh**	1
40mm deep tray	1	**Telescopic Guide rails, partial Extraction**	1

Accessories included for Secondary Oven



Oven grid with back stop	4	**Plate rack/warmer**	1

Accessories included for Third Oven

Rack with back and side stop	1	**40mm deep tray**	1

Electrical Connection

Electrical connection rating	19400 W	**Power supply cable length**	150 cm
Current	52 A	**Frequency**	50/60 Hz
Voltage	220-240 V	**Terminal block**	5 poles
Voltage 2 (V)	380-415 V	**Plug**	Not present

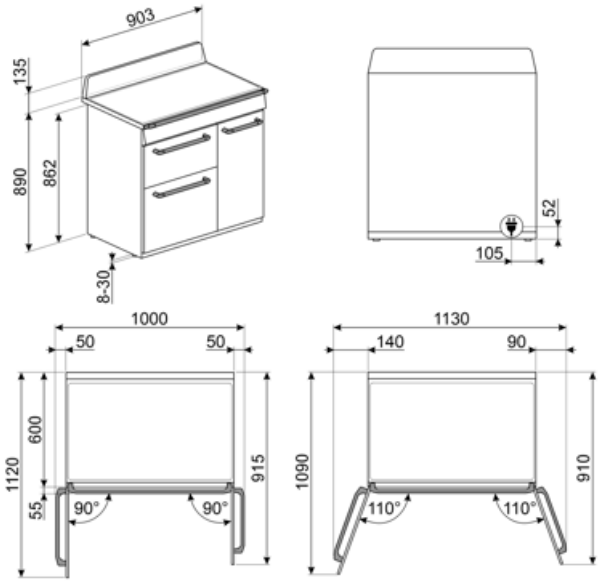
903
135
890
862
8-30
52
105
1000
50
50
1120
600
55
915
90°
90°
1130
140
90
1090
910
110°
110°

Compatible Accessories



AIRFRY2

Air fryer tray. Ideal for recreating traditional frying in the oven, but with fewer calories and less fat. It allows you to cook quickly and simply dishes such as French fries, fried vegetables and fish, ensuring perfect browning and crispiness.



BN620-1

Enamelled tray suitable for 45 cm and 60 cm ovens. Depth 20 mm. Perfect for a wide range of savoury and sweet baking.



BNP608T

Teflon-coated tray, 8 mm depth, to be placed on the grid



GTP

Partially extractable telescopic guides (1 level), suitable for traditional ovens. Made in stainless steel, they guarantee stability and facilitate the smooth extraction of the trays.



KIT1TR9N

Splashback black, 90cm ,suitable for TR90 and TR93 Victoria cookers



PALPZ

Pizza shovel with folding handle. Dimensions L31.5 x H32.5 cm. Easy and convenient to use and store. Perfect for serving pizza, bread and savory pastries in a safe and professional way.



SFLK1

Child lock



TPKPLATE

Universal plate for induction, gas, ceramic and electric hobs. Non-stick surface ideal for cooking fish, eggs and vegetables. Dimensions: 410 X 240 mm.



BBQ

Double sided plate BBQ. Suitable for recreating succulent and crispy dishes in the oven with the typical taste of grilled cooking. The ribbed side is particularly suitable for meats and cheeses. The smooth side for fish, seafood and vegetables.



BN640

Enamelled tray suitable for 45cm and 60cm ovens. Depth 540 mm. Perfect for cooking and roasting meat and fish in sauces. Also ideal for experimenting with lighter and crunchy side dishes



GRILLPLATE

Universal griddle for induction, gas, ceramic and electric hobs. Non-stick surface ideal for cooking meat, cheese and vegetables. Dimensions: 410 x 240 mm.



GTT

Totally extractable telescopic guides (1 level), suitable for traditional ovens. Made in stainless steel, they guarantee stability and facilitate the smooth extraction of the trays.



KITH93

Height extension kit (950mm), black, suitable for TR93 cookers (945-960mm)



SCRP

Non-scratch hob scraper - suitable for induction and ceramic hobs

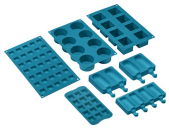

SMOLD

Set of 7 silicone moulds for ice creams, ice lollies, pralines, ice cubes or to portion food. Usable from -60°C to +230°C

Symbols glossary



Child lock: some models are fitted with a device to lock the programme/cycle so it cannot be accidentally changed.



Installation in column: Installation in column.



Defrost by time: Manual defrost function. At the end of the set duration, the function stops.



Triple glazed doors: Number of glazed doors.



Ever Clean Enamel: Ever Clean enamel is applied electrostatically, corner to corner and edge to edge to prevent cracking or cracks over time. It is a particular pyrolytic enamel, resistant to acids which, in addition to being pleasantly bright, promotes greater cleaning of the oven walls, thanks to its lower porosity. It is baked at over 850 °C and slowly polymerized at a scientifically determined rate to ensure uniform depth and strength. Ever Clean enamel creates an impeccable finish both on the inside of the oven and on the trays, making the surfaces of the oven incredibly easy to maintain over time as it reduces the adhesion of fat during cooking.



Static: Traditional cooking suitable for the preparation of one dish at a time. The fan is not active and the heat comes from below and from above at the same time. Static cooking is slower and more delicate, ideal in order to get well cooked and dry dishes even inside. Ideal for cooking all types of roasts, fatty meats, bread, filled cakes.



ECO: low energy consumption cooking: this function is particularly suitable for cooking on a single shelf with low energy consumption. It is recommended for all types of food except those that can generate a lot of moisture (for example vegetables). To achieve maximum energy savings and reduce time, it is recommended to put the food in the oven without preheating the cooking compartment.



Grill element: Using of grill gives excellent results when cooking meat of medium and small portions, especially when combined with a rotisserie (where possible). Also ideal for cooking sausages and bacon.



Energy efficiency class A



Air cooling system: to ensure a safe surface temperatures.



Double glazed doors: Number of glazed doors.

B: Product energy rating, measured from A+++ to D / G depending on the product family.



Fan assisted base: the mix of fan and lower heating element alone allows to finish cooking foods already cooked on the surface but not internally more quickly. This system is recommended to finish cooking foods that are already well cooked on the surface, but not internally, which therefore require a moderate higher heat. Ideal for any type of food.



Circulaire: it is the perfect function for cooking all types of dishes in a more delicate way. The heat comes from the back of the oven and is distributed quickly and evenly. The fan is active. It is also ideal for cooking on multiple levels without mixing smells and flavors.



Grill: Very intense heat coming only from above from a double heating element. The fan is not active. Provides excellent grilling and gratinating results. Used at the end of cooking, it gives a uniform browning to dishes.



Half grill: For rapid cooking and browning of foods. Best results can be obtained by using the top shelf for small items, the lower shelves for larger ones, such as chops or sausages. For half grill heat is generated only at the centre of the element, so is ideal for smaller quantities.

Fan grill: very intense heat coming only from above from a double heating element. The fan is active. It allows the optimal grilling of thickest meats. Ideal for large cuts of meat.

Turbo: the heat comes from 3 directions: above, below and from the back of the oven. The fan is active. It allows quick cooking, even on several shelves without mixing the aromas. Ideal for large volumes or foods that require intense cooking.

Induction: The work of these hobs is based on the principle of electromagnetic induction. The heat is generated directly in the bottom of the pan during its contact with the hob.

The inner door glass: can be removed with a few quick movements for cleaning.

Plate rack warming: function for heating or keeping dishes warm. Place the baking tray on the lowest shelf and stack the dishes to be heated.

The oven cavity has 4 different cooking levels.

Telescopic rails: allow you to pull out the dish and check it without having to remove it from the oven entirely.

Tilting grill: the tilting grill can be easily unhooked to move the heating element and clean the roof of the appliance in one simple step.

The capacity indicates the amount of usable space in the oven cavity in litres.

The capacity indicates the amount of usable space in the oven cavity in litres.

Light

Overheat protection: The safety system that automatically turns off the hob in case of overheating of the control unit.

All glass inner door: All glass inner door, a single flat surface which is simple to keep clean.

Side lights: Two opposing side lights increase visibility inside the oven.

The oven cavity has 2 different cooking levels.

The oven cavity has 9 different cooking levels.

Electronic control: Allows you to maintain temperature inside the oven with the precision 2-3 ° C. This enables to cook meals that are very sensitive to temperature changes, such as cakes, souffles, puddings.

Vapor Clean: a simple cleaning function using steam to loosen deposits in the oven cavity.

The capacity indicates the amount of usable space in the oven cavity in litres.

Benefit (TT)

Induction hob

Induction offers fast cooking and precise temperature control

Through the use of suitable cookware, induction is easy to use and maintain, safe and responsive.

Vapor Clean

By inserting water into a recess at the bottom of the cavity, steam is generated, which softens the residue and facilitates its removal

By inserting water into a recess at the bottom of the cavity, steam is generated, which softens the residue and facilitates its removal.

Buttons control

Easy and intuitive timer setting with a simple buttons

True-convection

The best cooking performances guaranteed by ventilated circular flow

Multiple fans and heating elements guarantee the perfect aerodynamic heat flow, allowing homogeneous and quicker cooking inside the cavity.

Multilevel cooking

Several cooking levels allow maximum flexibility of use

Multilevel halogen light

Internal halogen lighting on different levels guarantees excellent visibility

Removalble inner glass

Internal door glasses are easily removable for complete cleaning

Tangential cooling

New cooling system with tangential fan and airflow from the door to the splashback

Telescopic guides

Easy extraction and safe insertion of trays into the oven thanks to telescopic guides

Adjustable height

Cooker top flushed with the working area thanks to adjustable feet

Cold door

During any function, the external door glass is cold, avoiding any risk of burns

AirFry (AIRFRY optional accessory)

Lighter and tastier food thanks to airfry basket (optional accessory)

BBQ (optional accessory)

Barbecue cooking directly in the oven with the double-sided grill (BBQ optional accessory)

Pizza stone (optional accessory)

Baking with refractory stone for soft and crispy pizza and yeast products (STONE optional accessory)

Isothermic Cavity

The best cooking performance at the highest energy efficiency

Single turbine

The oven has a fan equipped with a circular heating element allowing cooking with rotating heat