U8C082DF



Product Family	Refrigerator
Installation	Built-in
Category	Under counter
Built-in niche	82 - 87
Reference width	Until 60 cm
Reference height	Until 100 cm
Cooling type	Static
Defrost	Manual
Hinge type	Door on door
Hinge position	Right
Reversible door	Yes
EAN code	8017709295493

Aesthetics

Aesthetic	Universale	**Logo**	Silk screen
Colour	White	**Door shelves profile color**	Silver
Design	Flat	**Drawers profile color**	Silver
Material	Metal sheet	**Color of glass shelf profile**	Chrome
Side material	Steel	**Display**	LED
Side colour	White	**Display position**	Interno (cella frigo)

Refrigerator compartment features

No. of adjustable shelves	2	**Crisper Cover**	Yes
Number of fruit and vegetables drawers	1	**Type of crisper/vegetable drawers cover**	Plastic
Shelves material	Glass	**Internal light in fridge**	Yes
Type of crisper/vegetable drawers cover	Standard	**Type of internal light (fridge)**	LED

Refrigerator Inner Door

No. of door shelves with transparent cover	1	**No. of bottle shelves**	1

Adjustable door shelves with wire support	Yes	**Bottle shelves with wire support**	Yes

Other Refrigerator features

Accessories	Kit listeria, Egg tray

Freezer compartment features

Internal freezer compartment	Yes

Other technical features

Functions display	Super function, Temperature regulation
Type of temperature control	Electronic
No. of compressors	1
Refrigerant gas type	R600a
Refrigerant Quantity (g)	32 g
Max weight door panel (fridge)	32 kg
Foam agent	Cyclopentane

Performance / Energy Label - Reg. 2019



Annual energy consumption	185 kWh/a	**Airborne acoustical noise emissions**	38 dB(A) re 1 pW
Energy efficiency class	F	**Temperature Rise Time**	8,20 h
Airborne acoustical noise emission class	C	**4 star - Freezing capacity**	2,6 kg/24h
Total net volume	111 l	**Climate class**	SN, N, ST
Sum of the volumes of the frozen compartment(s)	16 l	**EEI**	124 %
Sum of the volumes of the chill compartment(s) and the unfrozen compartment(s)	94 l		

Electrical Connection

Electrical connection rating	110 W	**Frequency (Hz)**	50 Hz
Current	0,9 A	**Power supply cable length**	240 cm
Voltage (V)	230-240 V	**Plug**	(F;E) Schuko

Logistic Information

Width	596 mm	**Height**	819 mm
Width of the built-in niche	600 mm	**Height of the built-in niche**	820 mm
Depth without handle	547 mm	**Product width with maximum doors opening**	777 mm
Depth of the built-in niche	550 mm		

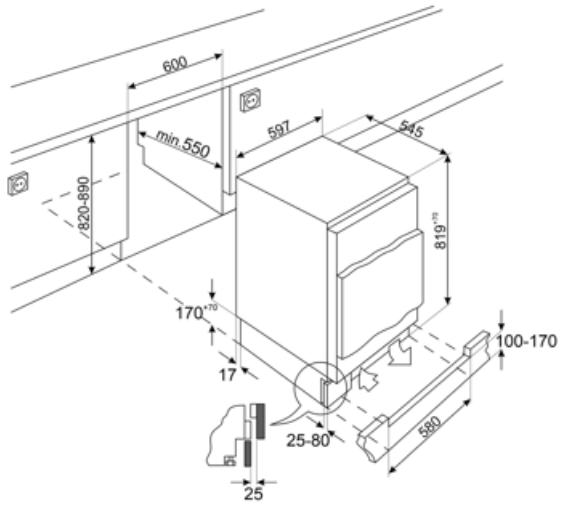

Symbols glossary



4 stars freezing compartment for better food preservation.



A+: Energy efficiency class A+ helps to save up to 10% energy compared to class A. Maximum performance with minimum consumption is guaranteed.



Energy efficiency class F



LED display: to show programmes, functions and options selected and the time to the end of the cycle.



LED interior lighting: is a more energy efficient and long lasting way of illuminating the interior of the appliance.



Built-in niche