U8F082DF1



Product Family	Freezers
Installation	Built-in
Built-In Niche	82-87 cm
Category	Under counter
Cooling type	Static
Hinge type	Door on door
Hinge position	Right
Reversible door	Yes

Aesthetics

Aesthetic	Universale	**Side material**	Metal
Colour	White	**Side colour**	White
Design	Flat	**Logo**	Silk screen
Material	Steel	**Drawers profile color**	Silver

Freezer compartment features

Number of drawers	3

Other technical features

Freezer compartment accessories	Ice cube tray	**Refrigerant gas type**	R600a
Fast freezing button	Yes	**Type of compressor**	Standard
Power on lamp	Yes	**Refrigerant Quantity (g)**	45 g
Temperature alarm lamp	Yes	**Foam agent**	Cyclopentane
Type of temperature control	Electro-mechanical	**Max weight door panel (freezer)**	41 kg
No. of compressors	1		

Performance / Energy Label - Reg. 2019

Annual energy consumption	220 kWh/a

Total net volume	95 l
Energy efficiency class	F
Airborne acoustical noise emission class	C
Noise level	39 dB(A) re 1 pW

Sum of the volumes of the frozen compartment(s)	95 l
Temperature Rise Time	13,50 h
4 star - Freezing capacity	7,1 kg/24h
Climate class	SN, N, ST, T
EEI	125 %

Electrical Connection

Electrical connection rating	120 W
Current	0,8 A
Voltage	230-240 V

Frequency (Hz)	50 Hz
Power supply cable length	240 cm
Plug	(F;E) Schuko

Logistic Information

Width	596 mm
Width of the built-in niche	600 mm
Depth without handle	547 mm
Height, maximum value	819 mm

Depth of the built-in niche	550 mm
Height of the built-in niche	820 mm
Product width with maximum doors opening	777 mm

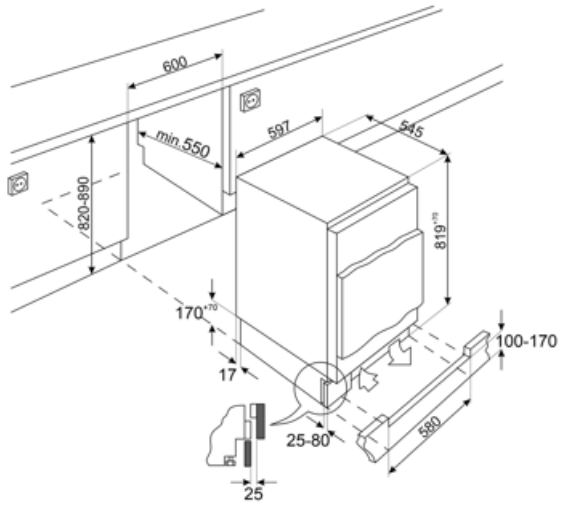

Symbols glossary



4 stars freezing compartment for better food preservation.



A+: Energy efficiency class A+ helps to save up to 10% energy compared to class A. Maximum performance with minimum consumption is guaranteed.



Energy efficiency class F



Built-in niche