UKFF08EW

Product Family	Freezers
Installation	Free Standing
Category	Under counter
Reference width	Until 60 cm
Reference height	Until 100 cm
Cooling type	Static
Hinge type	Standard
Hinge position	Right
Reversible door	Yes



Aesthetics

Aesthetic	Universale	**Handle type**	Fixed
Colour	White	**Side material**	Metal
Design	Flat	**Side colour**	White
Material	Steel	**Logo**	Applied
Handle	External	**Drawers profile color**	Bianco

Freezer compartment features

Number of drawers	3

Other Freezer features

Ice tray shelf	Yes

Other technical features

Freezer compartment accessories	Ice cube tray	**Type of compressor**	Standard
Type of temperature control	Electro-mechanical	**Refrigerant Quantity (g)**	42 g
No. of compressors	1	**Foam agent**	Cyclopentane
Refrigerant gas type	R600a		

Performance / Energy Label - Reg. 2019

Annual energy consumption	200 kWh/a
Total net volume	63 l
Energy efficiency class	E
Airborne acoustical noise emission class	C
Noise level	39 dB(A) re 1 pW
Sum of the volumes of the frozen compartment(s)	64 l
Temperature Rise Time	11 h
4 star - Freezing capacity	3,3 kg/24h
Climate class	SN, N, ST, T
EEI	100 %

Electrical Connection

Electrical connection rating	119 W
Current	0,76 A
Voltage	220-240 V
Frequency (Hz)	50 Hz
Plug	(F;E) Schuko

Logistic Information

Width	480 mm
Depth without handle	510 mm
Height, maximum value	821 mm
Product width with maximum doors opening	580 mm

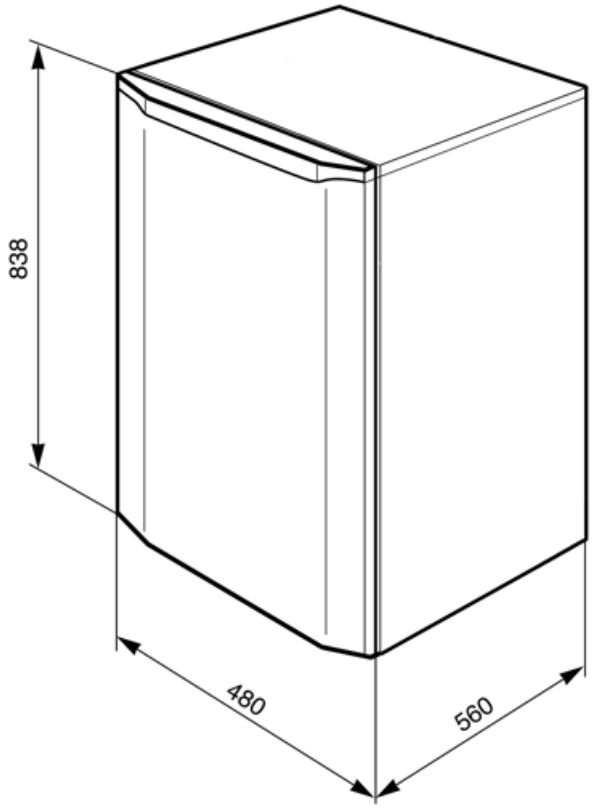
838
480
560

Symbols glossary



4 stars freezing compartment for better food preservation.



Energy efficiency class E