UKS9L1721E



Product Family	Refrigerator
Installation	Built-in
Category	One Door
Built-in niche	178
Reference width	Until 60 cm
Reference height	160 - 200 cm
Cooling type	Fan assisted
Defrost	Automatic
Hinge type	Standard
Kitchen panel	Not supplied
Hinge position	Right
Reversible door	Yes
EAN code	8017709348083

Aesthetics

Aesthetic	Universale	**Drawers profile color**	Silver
Design	Flat	**Color of glass shelf profile**	Silver
Material	Metal sheet	**Display**	LED
Side material	Steel	**Display position**	Interno (cella frigo)
Door shelves profile color	Silver		

Refrigerator compartment features

Number of compartments	1	**Crisper Cover**	Yes
Compartment types	Fruit and vegetable compartment	**Type of crisper/vegetable drawers cover**	Glass
No. of adjustable shelves	4	**No. of lights refrigerator compartment**	1
Number of fruit and vegetables drawers	1	**Internal light in fridge**	Yes
Shelves material	Glass	**Type of internal light (fridge)**	LED
Type of crisper/vegetable drawers cover	On sliding rails		

Refrigerator Inner Door

		No. of bottle shelves	1

No. of door shelves with transparent cover	1
Number of adjustable door shelves	3

Other Refrigerator features



Accessories	Egg tray	**Fan**	Yes

Other technical features



Functions display	Fast cooling
Type of temperature control	Electronic
No. of compressors	1
Refrigerant gas type	R600a
Type of compressor	Inverter
Refrigerant Quantity (g)	42 g
Foam agent	Cyclopentane

Performance / Energy Label - Reg. 2019



Annual energy consumption	114 kWh/a	**Sum of the volumes of the chill compartment(s) and the unfrozen compartment(s)**	310 l
Energy efficiency class	E		
Airborne acoustical noise emission class	B	**Airborne acoustical noise emissions**	32 dB(A) re 1 pW
Total net volume	310 l	**Climate class**	SN, N, ST, T
		EEI	100 %

Electrical Connection

Electrical connection rating	70 W	**Frequency (Hz)**	50 Hz
Current	1 A	**Power supply cable length**	240 cm
Voltage (V)	220-240 V	**Plug**	(G) UK e Singapore

Logistic Information

Width	546 mm	**Depth of the built-in niche**	550 mm
Width of the built-in niche	560 mm	**Height**	1772 mm
Depth without handle	549 mm	**Height of the built-in niche**	1780 mm

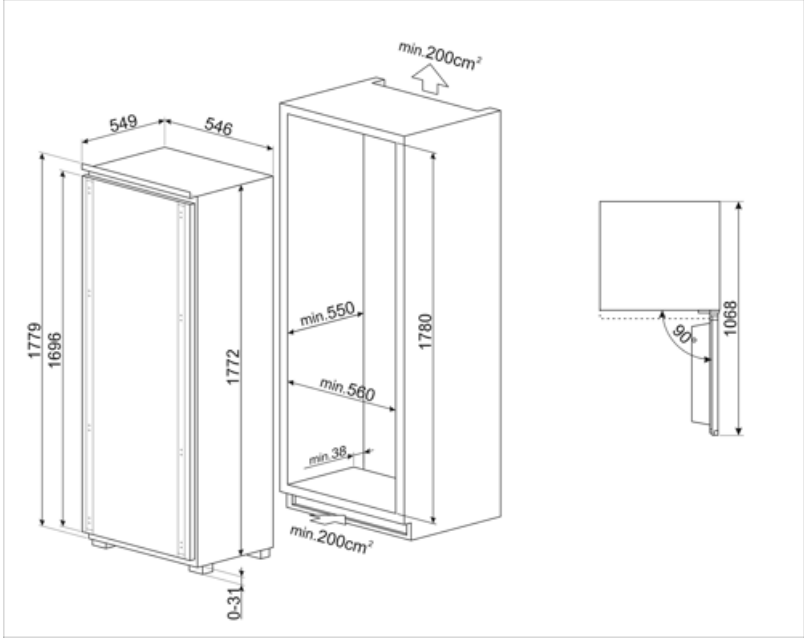
min.200cm²
549
546
1779
1696
1772
0-31
min.550
min.560
min.38
1780
min.200cm²
90°
1068

Symbols glossary



The automatic defrost system works by automatically defrosting at regular intervals eliminating the need to defrost altogether.



LED display: to show programmes, functions and options selected and the time to the end of the cycle.



LED interior lighting: is a more energy efficient and long lasting way of illuminating the interior of the appliance.



Built-in niche



Energy efficiency class E



Ventilated: Forced distribution of cold air in the refrigerator compartment, which allows even temperature distribution within the fridge.



Smeg's evolution towards more intelligent and eco-friendly models has led to the choice of Inverter technology, which significantly reduces consumption.