UM30

Sink material	Stainless steel
Type	Monoblock bowl
No. of bowls	1
EAN code	8017709064556



Aesthetics

Aesthetic	Universale	**Series**	Alba
Colour	Stainless Steel	**Building in type**	Undermount
Finishing	Brushed	**Logo**	Embossed

	Bowl type	Bowl dimensions, WxDxH (mm)	Bowl depth (mm)	Radius corner bowl	Overflow	Strainer position	Strainer dimension
Bowl	Traditional	300 x 400 x 180	180	75	Yes, traditional	Side bowl	3.5"

Technical Features

Dimensions of the product (mm)	180x320x420 mm	**No. of clips**	4
Cutout dimension undermount (mm)	296x396 mm	**Type of clips**	Undermount clip
Base unit size	45 cm	**Possibility to install waste disposal**	Yes
Tap hole diameter	35 mm		

Accessories included

Accessories for installation	Strainer, Fixing clips

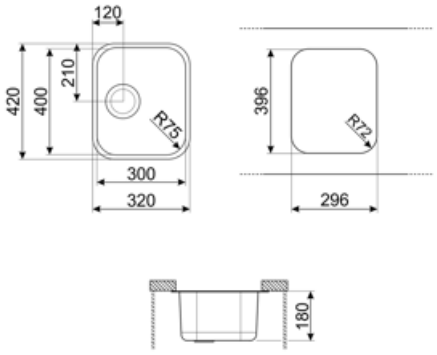
120
420
400
210
R75
300
320
396
R72
296
180

Compatible Accessories



3712

Siphon single bowl sinks (dishwasher connection included)



3713

Siphon double bowls sinks (dishwasher connection included)



KITFD050

Waste disposal 0,5 HP, Motor: 1/2 horsepower, Fits all sinks with 3 1/2" waste outlet



KITFD075

Waste disposal 0,75 HP, Motor: 1/2 horsepower, Fits all sinks with 3 1/2" waste outlet



KITFD100

Waste disposal 1 HP, Motor: 1/2 horsepower, Fits all sinks with 3 1/2" waste outlet



RND1V

Rondò waste kit 1 bowl with standard overflow

Symbols glossary



Cupboard width required for sink installation.



Sink depth - depending on the model, the depth can be from13 to 24,5.



Under table top installation: The sink is fixed under tabletop, which extends the work surface and the depth of the sink.

Benefit (TT)

One bowl

A single bowl for greater adaptability, capacity and space optimisation

Waste Kit

Possibility to install the waste disposal KITFD100 to easily dispose of organic waste, saving time and effor

The waste disposal is the ideal solution for a clean and sustainable kitchen: simple to use and compact, it disposes of food waste directly from the sink, reducing kitchen bad smells and improving hygiene.