UM4545

Sink material	Stainless steel
Type	Side by side undermount bowls
No. of bowls	2
EAN code	8017709157357



Aesthetics

Aesthetic	Universale	**Building in type**	Undermount
Colour	Stainless Steel	**Logo**	Embossed
Finishing	Brushed	**Tap hole / precut tap hole**	No Taphole
Series	Alba		

	Bowl type RH	Bowl thickness (mm)	Bowl dimensions, WxDxH (mm)	Bowl depth (mm)	Radius corner right bowl (mm)	Overflow	Strainer position	Strainer dimension
RH Bowl	Traditional	0.6	450 x 400 x 180	180	80	Yes, traditional	Wall position	3.5"
LH Bowl	Traditional	0.6	450 x 400 x 180	180	80	Yes, traditional	Wall position	3.5"

Technical Features

Frame thickness	1 mm	**Tap hole diameter**	35 mm
Dimensions of the product (mm)	180x890x510 mm	**Dividing wall width**	30 mm
Cutout dimension undermount (mm)	459*839 mm	**Gasket type**	Sealing paste
Undermount cutout radius	5 mm	**No. of clips**	8
Base unit size	90 cm	**Type of clips**	Undermount clip

Accessories included

Accessories for installation	Strainer, Savespace siphon with dishwasher outlet connection, Fixing clips

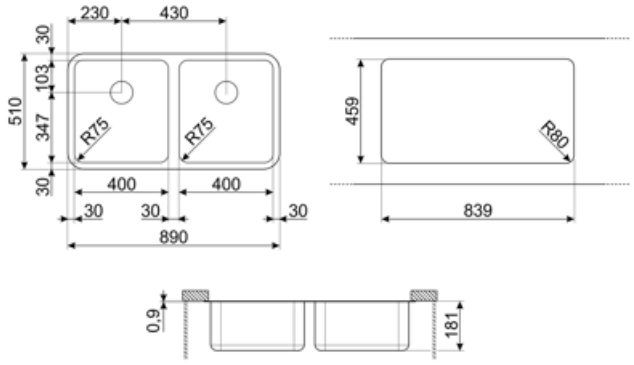

Compatible Accessories



3713

Siphon double bowls sinks (dishwasher connection included)



DB34

St/steel drain basket to fit STD radius 340 x 400 bowl, 180 mm depth



KITFD050

Waste disposal 0,5 HP, Motor: 1/2 horsepower, Fits all sinks with 3 1/2" waste outlet



KITFD075

Waste disposal 0,75 HP, Motor: 1/2 horsepower, Fits all sinks with 3 1/2" waste outlet



KITFD100

Waste disposal 1 HP, Motor: 1/2 horsepower, Fits all sinks with 3 1/2" waste outlet



RND1V

Rondò waste kit 1 bowl with standard overflow

Symbols glossary



Cupboard width required for sink installation.



Sink depth - depending on the model, the depth can be from13 to 24,5.



Under table top installation: The sink is fixed under tabletop, which extends the work surface and the depth of the sink.