UW6070DPS

Famille	Lave-vaisselle
Sous-famille	Lave-batteries
Line	Utensil washer
Dimensions du panier	600x700 mm
Pompe de rinçage	HTR system
Pompe de lavage	Standard
Alimentation électrique par défaut	400 V 3N~ / 18 kW /50 Hz

Accessoires inclus

Panier à couverts	1 x WH00S02	**Tuyau de chargement**	Oui - 2,5 m
Paniers universels	1x WB6070G01	**Tuyau de vidage**	Oui - 2 m

Distribution

Utilisateurs potentiels	Hôtels; Restaurants/ Traiteurs; Boulangerie/Pâtisserie; Laboratoires industriels boulangerie et pâtisserie; Boucheries; Industrie de transformation de la viande ; Ecoles; QSR

Programmes

Programmes lave-batteries	1- 120 sec (92 sec à 60°C - 18 sec à 85°C); 2- 240 sec (212 sec à 60°C - 10 sec égouttement - 18 sec à 85°C); 3- en continu à 60°C - 10 sec égouttement - 18 sec à 85°C
Productivité maxi panier/heure	30
Productivité maxi assiettes/heure	

Interface

Afficheur	4 chiffres	**Indicateur On-off**	Oui
Nombre de touches	3		

Construction

Cuve	Avec base imprimée
Construction	Simple parois
Matériau de la cuve	Inox AISI 304
Panneau arrière	Galvanisé
Système de lavage supérieur	Un bras de lavage à 3 bras et un bras de rinçage divisé, en acier inoxydable
Système de lavage inférieur	Un bras de lavage à 4 bras et un bras de rinçage séparé, en acier inoxydable.; Un seul bras de lavage et de rinçage latéral, en acier inoxydable.
Filtre cuve	Inox
Glissières pour paniers	Soudées
Filtre	2-stage filter system
Volume cuve	70 l
Volume chaudière	17 l
Classe de protection	IPX4
Pieds réglables	Oui
Hauteur maxi de vidage du sol	950 mm

Technologie

Option de lavage des paniers	Oui
Consommation d'eau par cycle	6 l
consommation minimale d'eau par cycle	1,8 l
Alimentation d'eau avec raccordement électrique par défaut	8°C
Température d'entrée maximale	60°C
Dureté maxi de l'eau d'alimentation	12°f - 7°dH
Chargement du détergent	1,5 l/h
Chargement du produit de rinçage	0,4 l/h
Hauteur utile de chargement	850 mm
Hauteur porte ouverte	2465 mm
Profondeur maxi avec la porte ouverte	1255 mm
Hauteur maxi de lavage sans panier	860 mm
Dimensions	800x860x2100 mm

Raccordement électrique

Puissance de l'élément chauffant de la cuve	4500 W
Puissance de l'élément chauffant du boiler	9000 W
Puissance de la pompe de lavage	Blanc
Puissance installée par défaut	12700 W
Convertible en	230 V 3~ / 18 kW / 50 Hz

Equipement

Pompe d'évacuation	Oui
Distributeur de détergent péristaltique	Oui, à réglage manuel
Renouvellement partiel automatique de l'eau dans la cuve - pompe de vidange de série	Oui

Distributeur péristaltique de produit de rinçage	Oui, à réglage manuel	**Diamètre tuyau d'alimentation**	16 mm
Chaudière avec système Thermostop	Yes - default	**Diamètre tuyau d'évacuation**	21,5 mm
Système de démarrage progressif de la pompe de lavage	Oui	**Longueur du tuyau de détergent (rouge)**	2,2m
Break tank	Oui	**Longueur du tuyau du produit de rinçage (bleu)**	2,2m

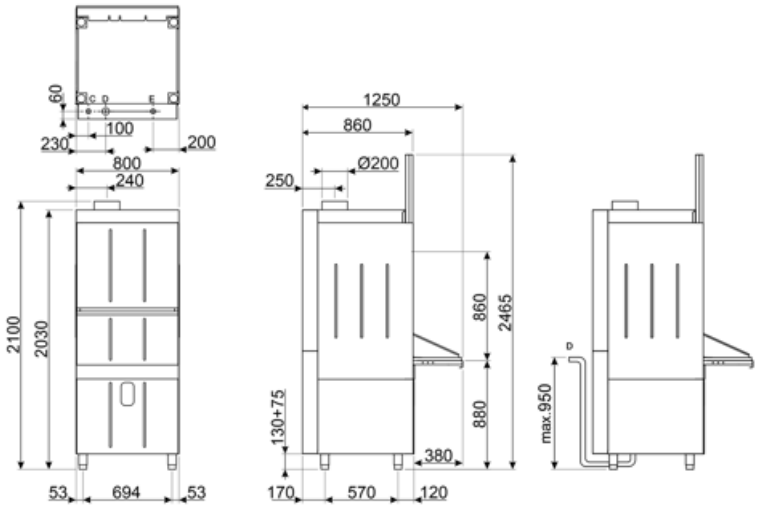

D = SCARICO 1½", VIDANGE 1½", DRAIN 1½"; ABFLUSS 1½"; DESAGÜE 1½"; СЛИВ 1½"
C = CARICAMENTO ACQUA ¾" GAS, CHARGEMENT EAU ¾" GAZ, WATER INLET ¾" GAS, ZUFLUSS ¾" GAS, CARGA AGUA ¾" GAS, НАБОР ВОДЫ ¾" GAS
E = ALLACCIAMENTO ELETTRICO, BRANCHEMENT ELECTRIQUE, ELECTRIC CONNECTION, ELEKTRISCHER ANSCHLUSS, CONEXION ELECTRICA, ЭЛЕКТРИЧЕСКОЕ ПОДСОЕДИНЕНИЕ

Accessoires Compatibles

WB6070G01

Panier universel avec fond plat, dim. (LxPxH) 700x600x305mm, pour lave-batteries

WH00S02

Porte ustensiles

WH00B02

Maintien pour poches à douille, pour lave-batteries

Symbols glossary

Compatible pour plateau Euronorm

Compatible avec plateau Gastronorm

Hauteur maximale utilisable 850mm

Benefit (TT)

Interface

Control panel with electronic buttons

The electronic control panel features an intuitive interface with soft-touch buttons, allowing easy selection of one of the three wash programmes: short, medium, or intensive. There are also buttons for power, selection, and cycle start. The display provides real-time monitoring of the tank and boiler temperature, as well as diagnostics, ensuring effortless and immediate control of the main functions.

2-stage system

Two-stage filtration system to ensure optimal washing performance and maximum water purity.

The filtration system is entirely made of AISI 304 stainless steel, ensuring maximum resistance, durability, and corrosion protection. It consists of two filtration stages: the first features a grid that prevents dirt residues from entering the tank, thereby avoiding water clouding; the second protects the washing pumps by retaining any debris that may accidentally enter the tank during filter cleaning.

HTR System

Consistent temperatures and pressures for uniform and effective dishwashing

Thanks to the HTR system (High Temperature Rinse) and the presence of the atmospheric boiler combined with the Thermostop, the cold inlet water does not enter the boiler during rinsing, ensuring a constant temperature of 85°C. The HTR system keeps the water hot for deep sanitisation and quick drying, ensuring constant pressure for uniform and effective cleaning.

Door

Split and balanced doors for maximum ergonomics

The split and balanced doors have been designed with the aim of optimising ergonomics during tool loading and unloading operations. Their design allows for easier use, minimising the physical effort required from the operator. This helps improve work efficiency while also ensuring greater comfort and safety in the working environment.

Drain pump

Partial water replacement during the wash cycle for clean and hygienic dishes

The standard drain pump, equipped with a partial water exchange system, ensures that the dirtiest water is automatically removed at every wash cycle. This mechanism allows for continuous renewal of the water used, ensuring that each phase of the washing process is carried out with clean water. The result is optimal dishwashing performance, with outstanding efficiency and an impeccable level of hygiene.

Soft-start system

Effective management of the washing pump to protect your glassware

The Soft-Start function initiates the wash cycle gently and gradually, progressively increasing the water pressure. This system has been designed to provide optimal protection for the most fragile items, such as crystal glasses, significantly reducing the risk of chipping or damage. At the same time, it ensures excellent cleaning performance, combining efficiency and safety in every wash cycle.

Wash pumps

Double-pump washing system to effectively remove even the most stubborn dirt

The Smeg utensil washer is equipped with an innovative double-pump washing system, designed to provide high power and an even distribution of water flow. This advanced technology ensures thorough and effective cleaning, removing even the most stubborn dirt residues.

Side spray wash

Equipped with lateral washing arms to reach even the most difficult corners

The washing system is equipped with lateral washing arms designed to ensure complete coverage, reaching every corner and ensuring that no surface is left uncovered. Thanks to this advanced technology, even baskets and large items are treated with thorough and impeccable cleaning, removing all traces of dirt and ensuring excellent results at every stage of the washing process.