VFU50SFR

Sink material	Stainless steel
Type	Monoblock bowl
No. of bowls	1
EAN code	8017709304669



Aesthetics

Aesthetic	Universale	**Building in type**	Flush fitted, Flat, Undermount
Colour	Stainless steel	**Logo**	Embossed
Finishing	Brushed	**Tap hole / precut tap hole**	No Taphole
Series	Mira		

	Bowl type	Bowl dimensions, WxDxH (mm)	Bowl depth (mm)	Radius corner bowl	Overflow	Strainer position	Strainer dimension
Bowl	Minimum radius	500 x 400 x 200	200	15	Yes, flush fitted	Wall position	3.5"

Technical Features

Dimensions of the product (mm)	200x540x440 mm	**Height from kitchen top**	1 mm
Cutout dimension topmount (mm)	525*425 mm	**Base unit size**	60 cm
Cutout dimension undermount (mm)	504*404 mm	**No. of clips**	8
Undermount cutout radius	17 mm	**Type of clips**	Standard + undermount clip

Accessories Included

Accessories for installation	Strainer, Savespace siphon with dishwasher outlet connection, Fixing clips, Silicone

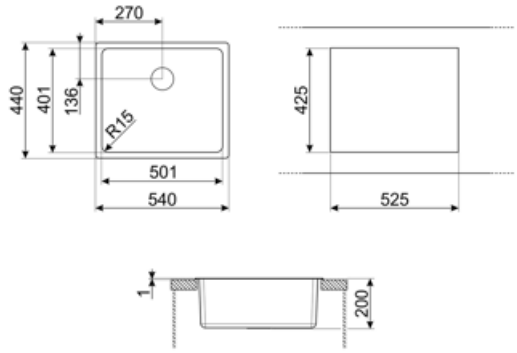

Compatible Accessories



3712

Siphon single bowl sinks (dishwasher connection included)



3713

Siphon double bowls sinks (dishwasher connection included)



DB34

St/steel drain basket to fit STD radius 340 x 400 bowl, 180 mm depth



KITDS

Soap dispenser chrome finishing with round knob



KITDSQ

Soap dispenser chrome finishing with square knob 40x40 mm



KITFD050

Waste disposal 0,5 HP, Motor: 1/2 horsepower, Fits all sinks with 3 1/2" waste outlet



KITFD075

Waste disposal 0,75 HP, Motor: 1/2 horsepower, Fits all sinks with 3 1/2" waste outlet



KITFD100

Waste disposal 1 HP, Motor: 1/2 horsepower, Fits all sinks with 3 1/2" waste outlet



RND1V

Rondò waste kit 1 bowl with standard overflow

Symbols glossary



Cupboard width required for sink installation



Sink depth - depending on the model, the depth can be from13 to 24,5



Flat: Installation of productwith flat edge.



Flush-fitted installation: Models of sinks/hobs which are integrated flush with the tabletop of a kitchen unit.



Under table top installation: The sink is fixed under tabletop, which extends the work surface and the depth of the sink.

Benefit (TT)

One bowl

A single bowl for greater adaptability, capacity and space optimisation