VSTQ3838

Sink material	Stainless steel
Type	Squared bowl
No. of bowls	2
EAN code	8017709151904



Aesthetics

Aesthetic	Universale	**Building in type**	Undermount
Colour	Stainless Steel	**Logo**	Embossed
Finishing	Satin	**Tap hole / precut tap hole**	No Taphole
Series	Quadra		

	Bowl type RH	Bowl thickness (mm)	Bowl dimensions, WxDxH (mm)	Bowl depth (mm)	Overflow	Strainer position	Strainer dimension
RH Bowl	Squared	1	380 x 400 x 210	210	Yes, traditional	Wall position	3.5"
LH Bowl	Squared	1	380 x 400 x 210	210	Yes, traditional	Wall position	3.5"

Technical Features

Frame thickness	1 mm	**Tap hole diameter**	35 mm
Dimensions of the product (mm)	210x811x428 mm	**Dividing wall width**	30 mm
Cutout dimension undermount (mm)	vedi dima mm	**No. of clips**	8
Undermount cutout radius	5 mm	**Type of clips**	Undermount clip
Base unit size	90 cm		

Accessories included

Accessories for installation	Strainer, Savespace siphon with dishwasher outlet connection, Fixing clips

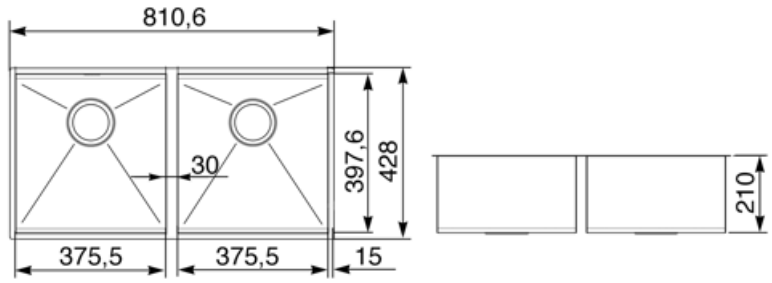

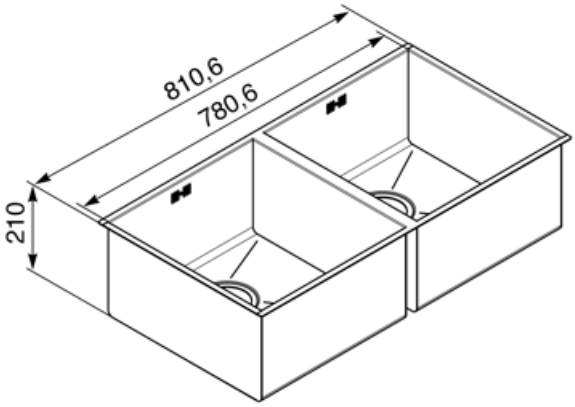

Compatible Accessories



KITFD050

Waste disposal 0,5 HP, Motor: 1/2 horsepower, Fits all sinks with 3 1/2" waste outlet



KITFD100

Waste disposal 1 HP, Motor: 1/2 horsepower, Fits all sinks with 3 1/2" waste outlet



STABMIX

Tap stabiliser



KITFD075

Waste disposal 0,75 HP, Motor: 1/2 horsepower, Fits all sinks with 3 1/2" waste outlet



RND2V

2 Bowls standard Rondò waste kit with rectangular overflow

Symbols glossary



Cupboard width required for sink installation.



Sink depth - depending on the model, the depth can be from13 to 24,5.



Under table top installation: The sink is fixed under tabletop, which extends the work surface and the depth of the sink.