VSTQ50-2

Sink material	Stainless steel
Type	Squared bowl
No. of bowls	1
EAN code	8017709127732



Aesthetics

Aesthetic	Universale	**Series**	Quadra
Colour	Stainless Steel	**Building in type**	Undermount
Finishing	Brushed	**Logo**	Embossed

	Bowl type	Bowl dimensions, WxDxH (mm)	Bowl depth (mm)	Overflow	Strainer position	Strainer dimension
Bowl	Squared	500 x 400 x 210	210	Yes, traditional	Wall position	3.5"

Technical Features

Dimensions of the product (mm)	210x520x418 mm	**Gasket type**	Sealing paste
Cutout dimension undermount (mm)	398*500 mm	**No. of clips**	6
Base unit size	60 cm	**Type of clips**	Undermount clip
Tap hole diameter	35 mm	**Possibility to install waste disposal**	Yes

Accessories included

Accessories for installation	Strainer, Savespace siphon with dishwasher outlet connection, Fixing clips

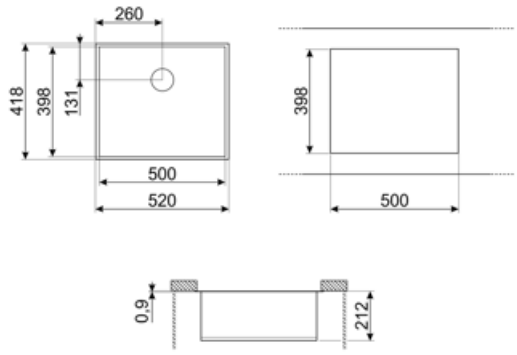
260
418
398
131
500
520
398
500
0,9
212

Compatible Accessories



3712

Siphon single bowl sinks (dishwasher connection included)



3713

Siphon double bowls sinks (dishwasher connection included)



KITFD050

Waste disposal 0,5 HP, Motor: 1/2 horsepower, Fits all sinks with 3 1/2" waste outlet



KITFD075

Waste disposal 0,75 HP, Motor: 1/2 horsepower, Fits all sinks with 3 1/2" waste outlet



KITFD100

Waste disposal 1 HP, Motor: 1/2 horsepower, Fits all sinks with 3 1/2" waste outlet



RND1V

Rondò waste kit 1 bowl with standard overflow



VSH20Q

Colander for square sinks radius 0 204 x 438 x 118 mm

Symbols glossary



Cupboard width required for sink installation.



Sink depth - depending on the model, the depth can be from13 to 24,5.



Under table top installation: The sink is fixed under tabletop, which extends the work surface and the depth of the sink.

Benefit (TT)

One bowl

A single bowl for greater adaptability, capacity and space optimisation

Waste Kit

Possibility to install the waste disposal KITFD100 to easily dispose of organic waste, saving time and effor

The waste disposal is the ideal solution for a clean and sustainable kitchen: simple to use and compact, it disposes of food waste directly from the sink, reducing kitchen bad smells and improving hygiene.