VSTR3434-2

Sink material	Stainless steel
Type	Side by side undermount bowls
No. of bowls	2
EAN code	8017709190576



Aesthetics

Aesthetic	Universale	**Building in type**	Undermount
Colour	Stainless Steel	**Logo**	Embossed
Finishing	Brushed	**Tap hole / precut tap hole**	No Taphole
Series	Mira		

	Bowl type RH	Bowl thickness (mm)	Bowl dimensions, WxDxH (mm)	Bowl depth (mm)	Radius corner right bowl (mm)	Overflow	Strainer position	Strainer dimension
RH Bowl	Minimum radius	1	340 x 400 x 200	200	15	Yes, flush fitted	Wall position	3.5"
LH Bowl	Minimum radius	1	340 x 400 x 200	200	15	Yes, flush fitted	Wall position	3.5"

Technical Features

Frame thickness	1 mm	**Tap hole diameter**	35 mm
Dimensions of the product (mm)	200x802x472 mm	**Dividing wall width**	48 mm
Cutout dimension undermount (mm)	411*740 mm	**No. of clips**	8
Base unit size	90 cm	**Type of clips**	Undermount clip

Accessories included

Accessories for installation	Strainer, Savespace siphon with dishwasher outlet connection, Fixing clips

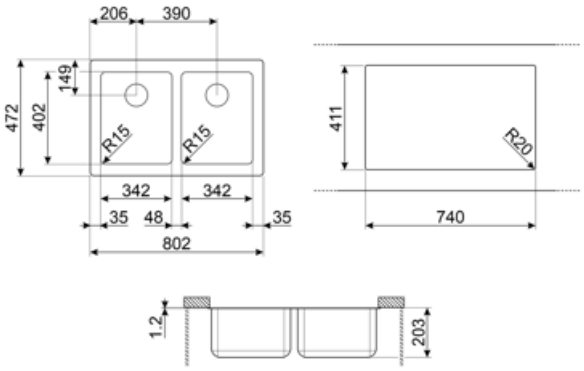

Compatible Accessories



3713

Siphon double bowls sinks (dishwasher connection included)



DB34

St/steel drain basket to fit STD radius 340 x 400 bowl, 180 mm depth



KITFD050

Waste disposal 0,5 HP, Motor: 1/2 horsepower, Fits all sinks with 3 1/2" waste outlet



KITFD075

Waste disposal 0,75 HP, Motor: 1/2 horsepower, Fits all sinks with 3 1/2" waste outlet



KITFD100

Waste disposal 1 HP, Motor: 1/2 horsepower, Fits all sinks with 3 1/2" waste outlet



RND1V

Rondò waste kit 1 bowl with standard overflow

Symbols glossary



Cupboard width required for sink installation.



Sink depth - depending on the model, the depth can be from13 to 24,5.



Under table top installation: The sink is fixed under tabletop, which extends the work surface and the depth of the sink.