VSTR40CUX

Sink material	Stainless steel
Type	Monoblock bowl
No. of bowls	1
EAN code	8017709276843



Aesthetics

Aesthetic	Universale	**Building in type**	Undermount
Colour	Copper	**Logo**	Embossed
Finishing	PVD Brushed	**Tap hole / precut tap hole**	No Taphole
Series	Mira		

	Bowl type	Bowl dimensions, WxDxH (mm)	Bowl depth (mm)	Radius corner bowl	Overflow	Strainer position	Strainer dimension
Bowl	Minimum radius	400 x 400 x 200	200	15	Yes, flush fitted	Wall position	3.5"

Technical Features

Characteristics PVD coating	Coating thickness , Eco-friendly, Easy to clean, Hypoallergenic	**Tap hole diameter**	35 mm
Dimensions of the product (mm)	200x440x440 mm	**No. of clips**	8
Cutout dimension undermount (mm)	404*404 mm	**Type of clips**	Undermount clip
Base unit size	60 cm		

Accessories included

Accessories for installation	Strainer, Savespace siphon with dishwasher outlet connection, Fixing clips

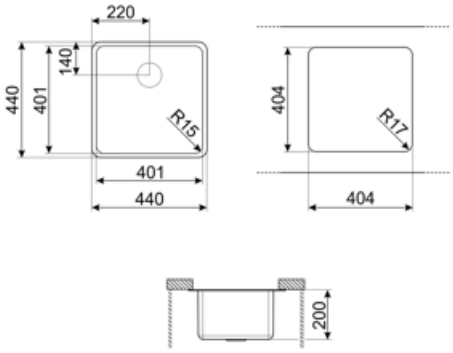

Compatible Accessories



3712

Siphon single bowl sinks (dishwasher connection included)



3713

Siphon double bowls sinks (dishwasher connection included)



DB34

St/steel drain basket to fit STD radius 340 x 400 bowl, 180 mm depth



KITFD050

Waste disposal 0,5 HP, Motor: 1/2 horsepower, Fits all sinks with 3 1/2" waste outlet



KITFD075

Waste disposal 0,75 HP, Motor: 1/2 horsepower, Fits all sinks with 3 1/2" waste outlet



KITFD100

Waste disposal 1 HP, Motor: 1/2 horsepower, Fits all sinks with 3 1/2" waste outlet

Alternative products



VSTR40DKX

Colour: Dark Inox



VSTR40BRX

Colour: Brass

Symbols glossary



Cupboard width required for sink installation.



Sink depth - depending on the model, the depth can be from13 to 24,5.



Under table top installation: The sink is fixed under tabletop, which extends the work surface and the depth of the sink.



Coating thickness between 0.2mm and 2mm



Easy to clean



The manufacturing process of PVD treatment is 100% green and eco-friendly



PVD coatings are hypoallergenic and suitable for use in contact with food

Benefit (TT)

One bowl

A single bowl for greater adaptability, capacity and space optimisation