VSTR50-2

Sink material	Stainless steel
Type	Monoblock bowl
No. of bowls	1
EAN code	8017709190552



Aesthetics

Aesthetic	Universale	**Building in type**	Undermount
Colour	Stainless Steel	**Logo**	Embossed
Finishing	Brushed	**Tap hole / precut tap hole**	No Taphole
Series	Mira		

	Bowl type	Bowl dimensions, WxDxH (mm)	Bowl depth (mm)	Radius corner bowl	Overflow	Strainer position	Strainer dimension
Bowl	Minimum radius	500 x 400 x 200	200	15	Yes, flush fitted	Wall position	3.5" Steel cover

Technical Features

Dimensions of the product (mm)	200x540x440 mm	**Tap hole diameter**	35 mm
Cutout dimension undermount (mm)	404*504 mm	**No. of clips**	8
Base unit size	60 cm	**Type of clips**	Undermount clip

Accessories included

Accessories for installation	Strainer, Fixing clips	**Rondò Cover waste kit**	Yes

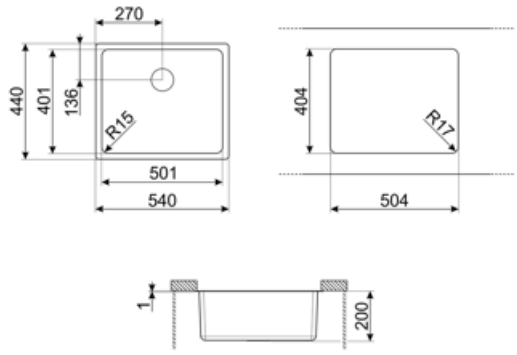
270
440
401
136
R15
501
540
404
R17
504
1
200

Compatible Accessories



3712

Siphon single bowl sinks (dishwasher connection included)



3713

Siphon double bowls sinks (dishwasher connection included)



KITDS

Soap dispenser chrome finishing with round knob



KITDSQ

Soap dispenser chrome finishing with square knob 40x40 mm



KITFD050

Waste disposal 0,5 HP, Motor: 1/2 horsepower, Fits all sinks with 3 1/2" waste outlet



KITFD075

Waste disposal 0,75 HP, Motor: 1/2 horsepower, Fits all sinks with 3 1/2" waste outlet



KITFD100

Waste disposal 1 HP, Motor: 1/2 horsepower, Fits all sinks with 3 1/2" waste outlet



STABMIX

Tap stabiliser

Symbols glossary



Cupboard width required for sink installation.



Sink depth - depending on the model, the depth can be from13 to 24,5.



Under table top installation: The sink is fixed under tabletop, which extends the work surface and the depth of the sink.

Benefit (TT)

One bowl

A single bowl for greater adaptability, capacity and space optimisation