# VSTR71CUX

| | |
|---|---|
| **Sink material** | Stainless steel |
| **Type** | Monoblock bowl |
| **No. of bowls** | 1 |
| **EAN code** | 8017709276867 |

## Aesthetics

| | | | |
|---|---|---|---|
| **Aesthetic** | Universale | **Building in type** | Undermount |
| **Series** | Mira | **Logo** | Embossed |
| **Colour** | Copper | **Tap hole / precut tap hole** | No Taphole |
| **Finishing** | PVD Brushed | | |

| | Bowl type | Bowl dimensions, WxDxH (mm) | Bowl depth (mm) | Radius corner bowl | Overflow | Strainer position | Strainer dimension |
|---|---|---|---|---|---|---|---|
| Bowl | Minimum radius | 710 x 400 x 200 | 200 | 15 | Yes, flush fitted | Wall position | 3.5" |

## Technical Features

| | | | |
|---|---|---|---|
| **Characteristics PVD coating** | Coating thickness , Eco-friendly, Easy to clean, Hypoallergenic | **Tap hole diameter** | 35 mm |
| **Dimensions of the product (mm)** | 200x750x440 mm | **No. of clips** | 8 |
| **Cutout dimension undermount (mm)** | 402*712 mm | **Type of clips** | Undermount clip |
| **Base unit size** | 80 cm | | |

## Accessories Included

| | |
|---|---|
| **Accessories for installation** | Strainer, Savespace siphon with dishwasher outlet connection, Fixing clips |

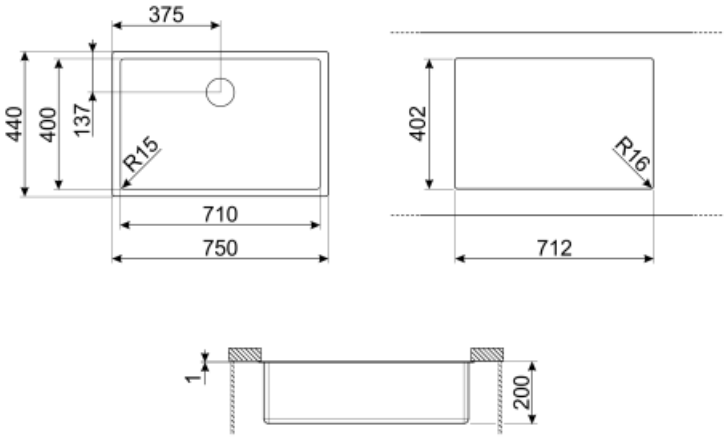

## Not included accessories

**KITFD050**

Waste disposal 0,5 HP, Motor: 1/2 horsepower, Fits all sinks with 3 1/2" waste outlet

**KITFD100**

Waste disposal 1 HP, Motor: 1/2 horsepower, Fits all sinks with 3 1/2" waste outlet

**3713**

Siphon double bowls sinks (dishwasher connection included)

**DB34**

St/steel drain basket to fit STD radius 340 x 400 bowl, 180 mm depth

**3712**

Siphon single bowl sinks (dishwasher connection included)

**KITFD075**

Waste disposal 0,75 HP, Motor: 1/2 horsepower, Fits all sinks with 3 1/2" waste outlet

## Symbols glossary (TT)

Cupboard width required for sink installation

Sink depth - depending on the model, the depth can be from13 to 24,5

Under table top installation: The sink is fixed under tabletop, which extends the work surface and the depth of the sink.

Coating thickness between 0.2mm and 2mm

Easy to clean

The manufacturing process of PVD treatment is 100% green and eco-friendly

PVD coatings are hypoallergenic and suitable for use in contact with food