VZ45N

Materiaal	Composiet
Type spoelbak	Composite bowl
Aantal spoelbakken	1
EAN-code	8017709311704



Design

Design	Universeel	**Logo**	On overflow
Kleur	Zwart	**Alternatieve kleuren**	Wit, Crème, Zandkleurig/ haver, Cemento / Concrete, EXTRA White, EXTRA Black
Series	Quadra		
Type inbouw	Standaard	**Geperforeerde opening voor kraan**	Geperforeerd

	Type spoelbak	Afmetingen spoelbak, BxHxD (mm)	Diepte spoelbak (mm)	Hoekradius spoelbak	Overloop spoelbak	Positie crepine spoelbak	Afmeting crepine
Spoelbak	Minimum radius	400 x 400 x 200	200	5	Ja, traditioneel	Wandkap	8,89 cm

Technische specificaties

Characteristics composite material	Anti-bacterieel, Easy to clean, Sifon met vaatwasseraansluiting, Termal schock resistant, Montagehaken, Garnituur, UV Resistant	**2 geperforeerde openingen voor kraan en systeem voor lediging**	1
		Diameter kraangat	35 mm
Afmetingen product (mm)	200x470x500 mm	**Aantal haken**	4
		Typpe haken	Standaard
Afmetingen nis (mm)	450 X 480 mm		
Hoogte vanaf werkblad	10 mm		

Afmeting inbouwmeubel 45 cm

Meegeleverde accessoires

Accessoires voor installatie inbegrepen	Crepine, Sifon met vaatwasseraansluiting, Montagehaken

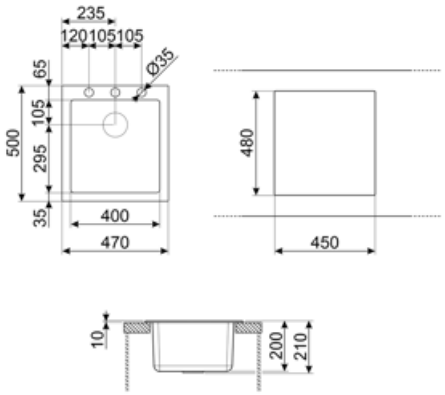

Compatible Accessories



KITDSQ

Soap dispenser chrome finishing with square knob 40x40 mm



KITFD050

Waste disposal 0,5 HP, Motor: 1/2 horsepower, Fits all sinks with 3 1/2" waste outlet



KITFD075

Waste disposal 0,75 HP, Motor: 1/2 horsepower, Fits all sinks with 3 1/2" waste outlet



KITFD100

Waste disposal 1 HP, Motor: 1/2 horsepower, Fits all sinks with 3 1/2" waste outlet

Alternative products



VZ45CT

Kleur: Cement / Concrete



VZ45B

Kleur: Wit

Symbols glossary



Cupboard width required for sink installation.



Sink depth - depending on the model, the depth can be from13 to 24,5.



Standard installation: Traditional installation in tabletop, suitable for any kitchen sets.



Antibacterial



Antiscratch



Termal schock resistant



High temperatures resistant



Impact resistant



Easy to clean



UV protection, does not fade over time.

Benefit (TT)

One bowl

A single bowl for greater adaptability, capacity and space optimisation

Tap hole possibility

Possibility of having the tap hole for direct installation of the tap on the sink, for a larger and neater surface area