VZ79N

Sink material	Composite
Type	Composite bowl
No. of bowls	1
EAN code	8017709183424



Aesthetics

Aesthetic	Universale	**Logo**	On overflow
Colour	Black	**Alternative colours available**	White, Cream, Beige, Cemento / Concrete, EXTRA White, EXTRA Black
Series	Quadra		
Building in type	Standard	**Tap hole / precut tap hole**	Prepared

	Bowl type	Bowl dimensions, WxDxH (mm)	Bowl depth (mm)	Radius corner bowl	Overflow	Strainer position	Strainer dimension
Bowl	Minimum radius	720 x 400 x 200	200	5	Yes, traditional	Wall position	3.5"

Technical Features

Characteristics composite material	Antibacterial, Easy to clean, Anti-scratch , Termal schock resistant, High temperatures resistant, Impact resistant, UV Resistant	**Tap hole**	1
		Tap hole diameter	35 mm
		No. of clips	10
		Type of clips	Standard
		Possibility to install waste disposal	Yes
Dimensions of the product (mm)	200x790x500 mm		
Cutout dimension topmount (mm)	770 X 480 mm		

Height from kitchen top	10 mm
Base unit size	80 cm

Accessories included

Accessories for installation	Strainer, Savespace siphon with dishwasher outlet connection, Fixing clips

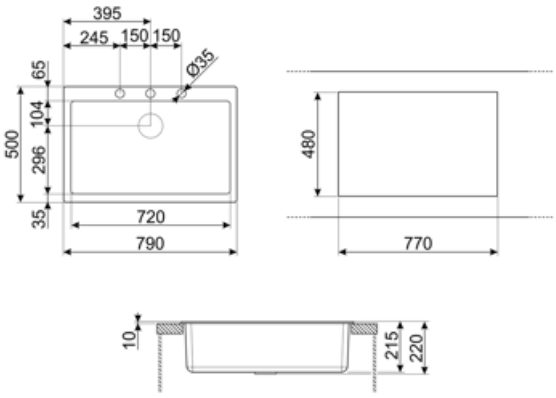

Compatible Accessories



KITDSQ

Soap dispenser chrome finishing with square knob 40x40 mm



KITFD050

Waste disposal 0,5 HP, Motor: 1/2 horsepower, Fits all sinks with 3 1/2" waste outlet



KITFD075

Waste disposal 0,75 HP, Motor: 1/2 horsepower, Fits all sinks with 3 1/2" waste outlet



KITFD100

Waste disposal 1 HP, Motor: 1/2 horsepower, Fits all sinks with 3 1/2" waste outlet

Alternative products



VZ79CT

Colour: Cement / Concrete



VZ79B

Colour: White

Symbols glossary



Cupboard width required for sink installation.



Sink depth - depending on the model, the depth can be from13 to 24,5.



Standard installation: Traditional installation in tabletop, suitable for any kitchen sets.



Antibacterial



Antiscratch



Termal schock resistant



High temperatures resistant



Impact resistant



Easy to clean



UV protection, does not fade over time.

Benefit (TT)

One bowl

A single bowl for greater adaptability, capacity and space optimisation

Tap hole possibility

Possibility of having the tap hole for direct installation of the tap on the sink, for a larger and neater surface area

Waste Kit

Possibility to install the waste disposal KITFD100 to easily dispose of organic waste, saving time and effor

The waste disposal is the ideal solution for a clean and sustainable kitchen: simple to use and compact, it disposes of food waste directly from the sink, reducing kitchen bad smells and improving hygiene.