VZP45CT

Sink material	Composite
Type	Composite bowl
No. of bowls	1
EAN code	8017709294120

Aesthetics

Aesthetic	Universale	**Logo**	On overflow
Colour	Cement / Concrete	**Alternative colours available**	Dove Gray, Black, White
Series	Quadra		
Building in type	Standard, Undermount	**Tap hole / precut tap hole**	No Taphole

	Bowl type	Bowl dimensions, WxDxH (mm)	Bowl depth (mm)	Radius corner bowl	Overflow	Strainer position	Strainer dimension
Bowl	Minimum radius	400 x 400 x 215	215	10	Yes, flush fitted	Wall position	3.5"

Technical Features

Characteristics composite material	Antibacterial, Easy to clean, Anti-scratch , Termal schock resistant, High temperatures resistant, Impact resistant, UV Resistant	**Height from kitchen top**	6 mm
		Base unit size	45, 50 cm
		No. of clips	4
		Type of clips	Standard + undermount clip
Dimensions of the product (mm)	215x456x456 mm		
Cutout dimension topmount (mm)	446x446 mm		

Cutout dimension undermount (mm)	400x400 mm
Undermount cutout radius	10 mm

Accessories included

Accessories for installation	Strainer, Savespace siphon with dishwasher outlet connection, Fixing clips

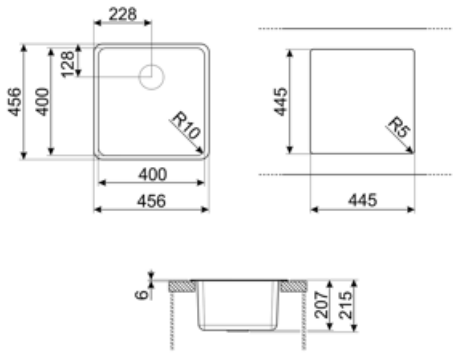

Compatible Accessories

CB25MN

Single HPE chopping board to fit minimum radius bowls, black matt, measures 250 x 410 H 12 mm, dishwasher safe

COL19

St/Steel colander to fit MINIMUM radius mm bowl, measures 200 x 410 x 26 mm

COL36

St/steel colander for MINIMUM radius bowls, measures 370 x 410 x 30 mm

KITFD050

Waste disposal 0,5 HP, Motor: 1/2 horsepower, Fits all sinks with 3 1/2" waste outlet

KITFD100

Waste disposal 1 HP, Motor: 1/2 horsepower, Fits all sinks with 3 1/2" waste outlet

CB28QU

Single HPL chopping board for miminum radius, oak, measures 280 x 418 H 12 mm

COL19H

St/Steel colander to fit MINIMUM radius mm bowl, measures 200 x 410 x 100 mm

KITDSQ

Soap dispenser chrome finishing with square knob 40x40 mm

KITFD075

Waste disposal 0,75 HP, Motor: 1/2 horsepower, Fits all sinks with 3 1/2" waste outlet

Alternative products

VZP45B

Colour: White

VZP45N

Colour: Black

Symbols glossary

Cupboard width required for sink installation.

Sink depth - depending on the model, the depth can be from13 to 24,5.

Standard installation: Traditional installation in tabletop, suitable for any kitchen sets.

Under table top installation: The sink is fixed under tabletop, which extends the work surface and the depth of the sink.

Cupboard width required for sink installation

Antibacterial

Antiscratch

Termal schock resistant

High temperatures resistant

Impact resistant

Easy to clean

UV protection, does not fade over time.

Benefit (TT)

One bowl

A single bowl for greater adaptability, capacity and space optimisation