WD3T964SSA

EAN Code	8017709296230
Product Family	Washer-Dryer
Commercial width	60 cm
Commercial depth	Standard capacity
Installation	Free-standing
Load type	Frontal



Programs

Controls	Electronic
Programmes graphics	Written in EN
No. of programmes	15

Programmes

Duvet	Rapid 12'	Daily Fast 60'
Eco 20°	Cotton 40°	Cotton 60°
Anti-allergy	Cotton Dry	Cotton Wash & Dry
Delicate drying	Drain + Spin	Quick Wash & Dry
Rinse	Synthetics	Wool

Washing Temperature

Cool	20°C	30°C
40°C	60°C	90°C

Special programmes

Anti-allergy	Wool	Quick 12 min
Quilt		

Display

Residual time indicator	delay start	
Display type		
Buttons/Options		
Drying Option	Drying time	Options
Save+ / Express	 Delay timer	Spin Speed
Temperature		
End of cycle indicator (light)	On display	

Technical Features



Type of motor	Brushless/Inverter
Electronic control functioning	Yes
Programme selection knob	Yes
Spin speed selection on display/LED	No spin/ 400/ 800/ 1000/ 1200/ 1400
Display/led for temperature regulation	Yes
Polypropilene tank	Yes
Basket	Stainless steel
Drum capacity	61 l
Door diameter	33 cm

Door opening	135°
Automatic variable load	Yes
Antifoam system	Yes
Load balancing system	Automatic
Easy to access filter	Yes
Child lock (functions block)	Control block
Anti-flood system	Yes
Water supply	Single, cold

Performance / Energy Label



Washing loading capacity	9 kg
Drying loading capacity	6 kg
Max spin speed	1400 giri/min
Energy efficiency class	A
Washing efficiency class	A
Energy rating	AA
Noise level washing	53 dB(A) re 1 pW

Noise level spinning	74 dB(A) re 1 pW
Noise level drying	60 dB(A) re 1 pW
Energy consumption - Cotton 60° - Wash only	0,96 kWh
Energy consumption (washing + drying)	6,12 kWh
Duration of the normative programme	645 min
Energy annual consumption (washing+drying)	1224 kWh
Water annual consumption (washing+drying)	23600 l

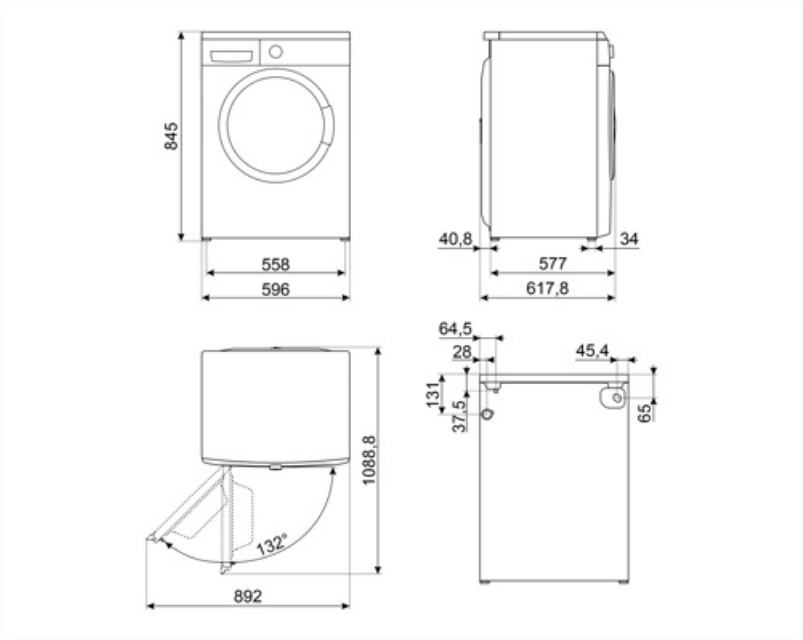
845
558
596
40,8
34
577
617,8
64,5
28
45,4
131
37,5
65
1088,8
132°
892

Symbols glossary



Variable load: In all models of washing machines is present the system of variable load, according to which the machine automatically diversifies the wash cycle and the time of operation depending on the quantity and type of laundry introduced, allowing a significant saving of water and energy power, up to 30% compared to the versions with fixed load.



Energy efficiency class A



Delay timer: can be set to run the programme at a convenient time or to take advantage of off-peak energy periods.



33 cm: Large loading hatch of 30-32-33 cm in diameter, makes laundry loading and unloading easier and faster with maximum ease of use.



This option advises when the periodic cleaning of the filters is needed, in order to avoid forgetfulness and thus guarantee the perfect functioning of the dryer over time. The convenient position of the filters makes maintenance fast and extremely simple.



Antiallergic: Antiallergic program with particular attention to the total removal of residual detergent.



Cotton 60°: For soiled fabrics in cotton



To drain the water in the machine.



Duvet: gentle cycle specific for duvet.



Synthetics: programme designed for synthetic and mixed-fibre fabrics. Ideal for lightly to normally soiled garments, it uses moderate temperatures and a gentler washing action to protect the fibres and reduce creasing, ensuring effective cleaning without stressing the materials.



Automatic Load Balancing: provides an ideal distribution of laundry in the drum. In case if the imbalance is detected, the rotation speed starts being controlled in such way to evenly redistribute laundry in the drum, and thus reduce vibration.



Child lock: some models are fitted with a device to lock the programme/cycle so it cannot be accidentally changed.



LED display: to show programmes, functions and options selected and the time to the end of the cycle.



Gentle drying: program designed to get laundry ready for easy ironing.



Smeg's evolution towards more intelligent and eco-friendly models has led to the choice of Inverter technology, which significantly reduces consumption.



Cotton 40°: For soiled fabrics in cotton



Program for drying cotton items including sheets, pillow cases, pajamas, lingerie, tablecloths, etc



Super fast 12 min: a programme designed to wash small amounts of laundry fast, ideal for washing lightly soiled garments.



Extra rinse: The Extra rinse option: can be added to the selected programme when more thorough cleansing of special fabrics is needed.



Wool: this programme for wool or delicate fabrics uses slower rotations of the drum to ensure the utmost care for clothing.