WDF12C7-1



EAN Code	8017709161897
Product Family	Washer-Dryer
Commercial width	60 cm
Commercial depth	Standard capacity
Installation	Free-standing
Load type	Frontal

Programs

Controls	Electronic
Programmes graphics	Written in EN
Languages clip	
No. of programmes	15

Programmes

- Cotton
- Cotton ECO
- Clean
- Delicate drying
- Delicates
- Drain + Spin
- Mix
- Night
- Normal drying
- Quick wash 15 min
- Rinse + Spin
- Shirts
- Sport
- Synthetics
- Wool

Washing Temperature

Cool	30°C
40°C	60°C
75°C	90°C

Special programmes

Wool

Mix

Quick

Special Clean programme, to remove residual fluff Yes

Display

Residual time indicator	delay start
Recommended load indicator	programme status indication

Display type LED DISPLAY

Buttons/Options

Delay timer

Prewash

Additional rinse

No spin

Anti-wrinkle (easy ironing)

Quick

Intensive

Cold wash

Drying

Programme progress indicator (light) On display

End of cycle indicator (light) On display

Technical Features

Effective consumption		**Door diameter**	30 cm
Type of motor	Standard	**Door opening**	110°
Electronic control functioning	Yes	**Automatic variable load**	Yes
		Antifoam system	Yes
		Load balancing system	Automatic

Programme selection knob	Yes
Temperature selection knob	
Spin speed selection on display/LED	No spin/ 500/ 600/ 800/ 1000/ 1200
Display/led for temperature regulation	Yes
Polypropilene tank	Yes
Basket	Stainless steel
Drum capacity	52 l
Liquid detergent accessory as standard	Yes
Easy to access filter	Yes
Child lock (functions block)	Control block
Anti-flood system	Yes
Water supply	Single, cold
Accessories included	
Furniture door can be fitted on right or left side with adjustable hinges	

Performance / Energy Label



Washing loading capacity	7 kg
Drying loading capacity	4 kg
Max spin speed	1200 giri/min
Energy efficiency class	B
Washing efficiency class	A
Energy rating	BA
Noise level washing	59 dB(A) re 1 pW
Noise level spinning	72 dB(A) re 1 pW
Noise level drying	60 dB(A) re 1 pW
Energy consumption - Cotton 60° - Wash only	1.19 kWh
Energy consumption (washing + drying)	5.44 kWh
Water consumption (washing) per cycle	47 l
Water consumption (washing+drying) per cycle	103 l
Duration of the normative programme	410 min
Energy annual consumption (washing)	238 kWh
Energy annual consumption (washing+drying)	1088 kWh
Water annual consumption (washing)	9400 l
Water annual consumption (washing+drying)	20600 l
Residual humidity percentage (%)	55 %

Performance / Energy Label - Reg. 2019

Supplier's name or trademark	SMEG

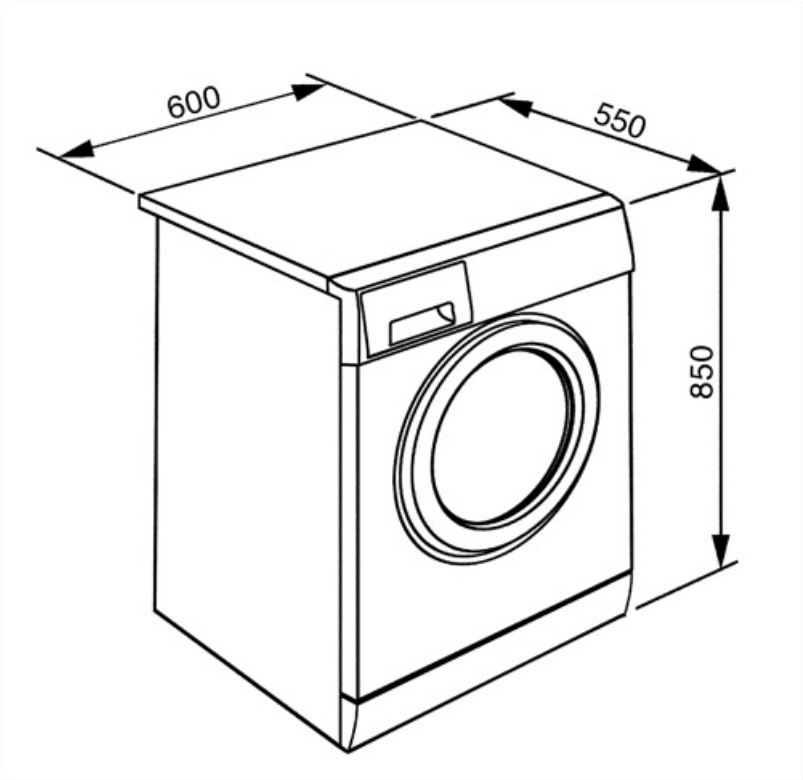
600
550
850

Symbols glossary



Easy Iron: this is an option which can be selected to ensure the finished laundry is left with less creases to make ironing easier.



Variable load: In all models of washing machines is present the system of variable load, according to which the machine automatically diversifies the wash cycle and the time of operation depending on the quantity and type of laundry introduced, allowing a significant saving of water and energy power, up to 30% compared to the versions with fixed load.



Automatic Load Balancing: provides an ideal distribution of laundry in the drum. In case if the imbalance is detected, the rotation speed starts being controlled in such way to evenly redistribute laundry in the drum, and thus reduce vibration.



Child lock: some models are fitted with a device to lock the programme/cycle so it cannot be accidentally changed.



B: Product energy rating, measured from A+++ to D / G depending on the product family.



Delay timer: can be set to run the programme at a convenient time or to take advantage of off-peak energy periods.



LED display: to show programmes, functions and options selected and the time to the end of the cycle.



30 cm: Large loading hatch of 30-32-33 cm in diameter, makes laundry loading and unloading easier and faster with maximum ease of use.



Gentle drying: program designed to get laundry ready for easy ironing.



Cold Wash: a programme designed for the effective washing of moderately soiled garments at low temperatures. Thanks to a specially developed washing algorithm, it delivers excellent cleaning results while helping preserve fabrics, colours and energy efficiency.



This shows the amount of laundry that can be inserted into the tumble dryer in KG.



This option advises when the periodic cleaning of the filters is needed, in order to avoid forgetfulness and thus guarantee the perfect functioning of the dryer over time. The convenient position of the filters makes maintenance fast and extremely simple.



Intensive option: this function extends the duration of the wash cycle and increases the intensity of the wash, ensuring a deeper cleaning for heavily soiled garments.



No spin option: this option allows to exclude the last spin phase, draing the water from the tank



Prewash: program designed for heavily soiled garments.



Cleaning programme: A cleaning programme has been created to maintain the performance of washer/dryers. The display shows automatically when cleaning is required.



Cotton: programme designed for washing medium to heavily soiled cotton garments, ensuring thorough and effective cleaning.



Eco 40-60: reference programme defined by EU regulations for measuring the energy performance of washing machines. Ideal for normally soiled cotton garments washable at 40 °C or 60 °C, it provides an excellent balance between cleaning performance and savings, although it requires a longer washing time.

Delicate: Clothing such as underwear, hosiery and luxury fabrics should be dried on the delicate cycle to help extend the life of the clothing.

Program designed for clothes that have to be stored or used immediately.

Mixed fabrics: this cycle is designed for lightly soiled laundry in a mix of cottons and synthetics, or can be used just to refresh stored items.

Quick 15 min.: ideal for small loads of lightly soiled garments, it guarantees a fast wash in a very short time.

Rinse and Spin: this programme is suitable for rinsing and spinning garments.

Sport: programme designed to quickly wash sports and technical clothing, which undergo frequent washes, ensuring optimal hygiene and protection of the fibres.

Wool: this programme for wool or delicate fabrics uses slower rotations of the drum to ensure the utmost care for clothing.

Drum has maximum capacity of 7kg of dry laundry.

To drain the water in the machine.

Extra Rinse: Extra Rinse: adds an extra rinse cycle to that already provided in the program chosen, to remove any residual detergent. This function is particularly suitable for those with allergies or skin problems.

Night: an ideal programme for those who want to take advantage of off-peak energy periods, this cycle is particularly quiet due to slower rotations of the drum.

Super fast: a programme designed to wash small amounts of laundry fast, ideal for washing lightly soiled garments.

Shirts: Specific program that allows you to wash shirts with the utmost attention. The addition of steam at the end of the cycle ensures a reduction in the formation of creases and ironing times.

Synthetics: programme designed for synthetic and mixed-fibre fabrics. Ideal for lightly to normally soiled garments, it uses moderate temperatures and a gentler washing action to protect the fibres and reduce creasing, ensuring effective cleaning without stressing the materials.

Option that allow to reduce times of the selected program.