WDN064SLDIN

EAN Code	8017709330590
Product familie	Was-droogcombinatie
Commerciële breedte	60 cm
Commerciële diepte	Standaard capaciteit
Installatie	Vrijstaand
Type lading	Voorlader



Programma's

Bediening	Elektronisch
Grafische weergave programma's	Tekst EN
Meertalig clipsysteem	Ja
Talen clip	

Scritte ES	Tekst DE	Tekst FR
Tekst NL	Tekst PT	Tekst SE
Written in DA	Written in NO	Written in FI
Written in PL	Written in UA	

Aantal programma's	15
Programma's	

Eco 40-60	Synthetic dry	Wash & Dry Cotton 6kg
Wash&Dry Anti allergy	Wash&Dry Express	Wool/Hand wash
Katoen	Centrifugeren	Gemixed
Katoen drogen	Overhemden/ Blouses	Quick Wash 14 min
Spoelen	Synthetisch	

Wastemperaturen

Koud	20°C	30°C
40°C	50°C	60°C
70°C	80°C	90°C

Speciale programma's

Wash&Dry Cotton 6 kg	Wash&Dry Anti allergy	Wash&Dry Express
Wol	Snel 14 min.	

Display

Weergave resttijd	Start uitstel	Programmavoortgang indicatie
Centrifuge regeling	Temperatuurregeling	

Type display LCD DISPLAY

Toetsen/opties

Ending in	Extra rinse	Voorwas
Anti-kreuk	Snel	Intensief
Stoom	Drogen	

Programmavoortgang indicator	Op display
Indicator einde cyclus	Op display

Technische specificaties

Type motor	Inverter motor	**Opening deur**	160°
Functionering met elektronische controle	Ja	**Variabele automatische lading**	Ja
Programmaknop	Ja	**Schuimbewaking**	Ja
Centrifuge regeling op display/ LED	Niet centrifugeren/ 400/ 600/ 800/ 1000/ 1200/ 1400 toeren	**Balanceringssysteem belading**	Automatisch
Temperatuurregeling op display/ LED	Ja	**Makkelijk te bereiken filter**	Ja
Polypropyleen kuip	Ja	**Kinderbeveiliging**	Blokkeringsinstellingen
Trommel	Inox	**Anti-overloopsysteem**	Ja
Capaciteit trommel	65 l	**Watertoevoer**	Enkel; koud water
Diameter deur	33 cm		

Prestaties/Energie label - Reg. 2019

Supplier's name or trademark	SMEG	**Waterverbruik (per cyclus)**	52 litre
Rated capacity washing cycle	10 kg	**Waterverbruik (complete cyclus)**	63 litre
Rated capaciity complete cycle	6 kg	**Spin-drying efficiency class**	B
Energy efficiency class (washing cycle)	C	**Airbone acoustical noise class**	B
Energy efficiency class (complete cycle)	D	**Airbone acoustical noise**	76 dB(A) re 1 pW
Weighted energy consumption lavaggio	68 kWh	**Eco 40-60 programme duration (Rated washing capacity)**	3:58 h:min
weighted energy consumption (ciclo complete)	306 kWh	**Wash and dry cycle duration (Rated capacity)**	9:30 h:min

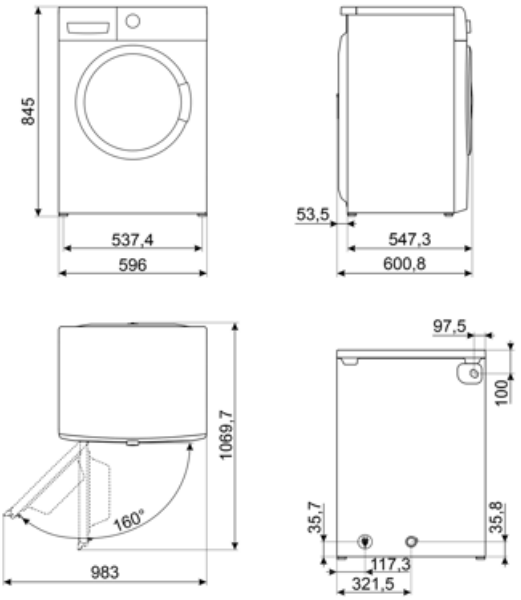

Symbols glossary



Easy Iron: this is an option which can be selected to ensure the finished laundry is left with less creases to make ironing easier.



Variable load: In all models of washing machines is present the system of variable load, according to which the machine automatically diversifies the wash cycle and the time of operation depending on the quantity and type of laundry introduced, allowing a significant saving of water and energy power, up to 30% compared to the versions with fixed load.



Automatic Load Balancing: provides an ideal distribution of laundry in the drum. In case if the imbalance is detected, the rotation speed starts being controlled in such way to evenly redistribute laundry in the drum, and thus reduce vibration.



Sommige modellen zijn voorzien van een functie om het programma/de cyclus te blokkeren zodat het niet per ongeluk kan aangepast worden.



LCD display: to optimize performance and simplify the use of the appliance.



33 cm: Large loading hatch of 30-32-33 cm in diameter, makes laundry loading and unloading easier and faster with maximum ease of use.



Gentle drying: program designed to get laundry ready for easy ironing.



This option advises when the periodic cleaning of the filters is needed, in order to avoid forgetfulness and thus guarantee the perfect functioning of the dryer over time. The convenient position of the filters makes maintenance fast and extremely simple.



Intensive option: this function extends the duration of the wash cycle and increases the intensity of the wash, ensuring a deeper cleaning for heavily soiled garments.



De evolutie van Smeg vaatwassers naar meer intelligente en milieuvriendelijke modellen heeft ertoe geleid om de inverter technologie te gebruiken, die een significante energie- en geluidsbesparing met zich meebrengt.



Prewash: program designed for heavily soiled garments.



Cotton: programme designed for washing medium to heavily soiled cotton garments, ensuring thorough and effective cleaning.



Eco 40-60: reference programme defined by EU regulations for measuring the energy performance of washing machines. Ideal for normally soiled cotton garments washable at 40 °C or 60 °C, it provides an excellent balance between cleaning performance and savings, although it requires a longer washing time.



Program for drying cotton items including sheets, pillow cases, pajamas, lingerie, tablecloths, etc



To drain the water in the machine.



Mixed fabrics: this cycle is designed for lightly soiled laundry in a mix of cottons and synthetics, or can be used just to refresh stored items.



Super fast 14 min.: a programme designed to wash small amounts of laundry fast, ideal for washing lightly soiled garments.



Extra rinse: The Extra rinse option: can be added to the selected programme when more thorough cleansing of special fabrics is needed.

Shirts: Specific program that allows you to wash shirts with the utmost attention. The addition of steam at the end of the cycle ensures a reduction in the formation of creases and ironing times.

Wool: this programme for wool or delicate fabrics uses slower rotations of the drum to ensure the utmost care for clothing.

Steam Option: the steam is perfect for smoothing out creases, refreshing fabrics, neutralizing odors and releasing dirt, destroying allergens more quickly than by washing the item in water.

Program for delicately treating garments in synthetic or mixed fabrics, such as t-shirts and blouses.

Wash & Dry: a programme designed to wash and dry up to 6 Kg of cotton laundry in one continuous cycle, without requiring any additional settings. Thanks to the optimisation of both washing and drying phases, it delivers effective and convenient results, leaving garments ready to wear or store at the end of the programme.

Synthetics: programme designed for synthetic and mixed-fibre fabrics. Ideal for lightly to normally soiled garments, it uses moderate temperatures and a gentler washing action to protect the fibres and reduce creasing, ensuring effective cleaning without stressing the materials.

Option that allow to reduce times of the selected program.

Wool/Hand wash: ideal program for delicate, wool and silk garments that require particular attention in washing. It uses room temperature water and slow drum rotations to ensure maximum garment care.

Energie-efficiëntieklasse