WDN064SLDUK

EAN Code	8017709328436
Product Family	Washer-Dryer
Commercial width	60 cm
Commercial depth	Standard capacity
Installation	Free-standing
Load type	Frontal



Programs

Controls	Electronic
Programmes graphics	Written in EN
No. of programmes	14

Programmes

Eco 40-60	Synthetic dry	Wash&Dry Anti allergy
Wash&Dry Cotton 6kg	Wash&Dry Express	Cotton
Cotton Dry	Drain + Spin	Mix
Quick Wash 14 min	Rinse	Shirts
Synthetics	Wool	

Washing Temperature

Cool	30°C	40°C
60°C	90°C	

Special programmes

Wash&Dry Cotton 6 kg	Wash&Dry Anti allergy	Wash&Dry Express
Wool	Quick 14 min	

Display

Residual time indicator	delay start	programme status indication
spin regulation	temperature regulation	

Display type LCD DISPLAY

Buttons/Options

Ending in	Extra rinse	Spin Speed
Temperature	Prewash	Anti-wrinkle (easy ironing)
Quick	Steam	Drying

Programme progress indicator (light)	On display
End of cycle indicator (light)	On display

Technical Features

Type of motor	Brushless/Inverter
Electronic control functioning	Yes
Programme selection knob	Yes
Spin speed selection on display/LED	No spin/ 600/ 800/ 1200/ 1400/ Rinse hold
Display/led for temperature regulation	Yes
Polypropilene tank	Yes
Basket	Stainless steel
Drum capacity	65 l
Door diameter	34 cm
Door opening	170°
Automatic variable load	Yes
Antifoam system	Yes
Load balancing system	Automatic
Easy to access filter	Yes
Child lock (functions block)	Control block
Anti-flood system	Yes
Aquastop system	Acquastop tube
Water supply	Single, cold

Performance / Energy Label

Energy rating

Performance / Energy Label - Reg. 2019

Supplier's name or trademark	SMEG
Rated capacity washing cycle	10 kg
Rated capaciity complete cycle	6 kg
Water consumption (washing cycle)	52 litre
Water Consumption (complete cycle)	63 litre
Spin-drying efficiency class	B

Energy efficiency class (washing cycle)	C	**Airbone acoustical noise class**	B
Energy efficiency class (complete cycle)	D	**Airbone acoustical noise**	76 dB(A) re 1 pW
Weighted energy consumption lavaggio	68 kWh	**Eco 40-60 programme duration (Rated washing capacity)**	3:58 h:min
weighted energy consumption (ciclo complete)	306 kWh	**Wash and dry cycle duration (Rated capacity)**	9:30 h:min

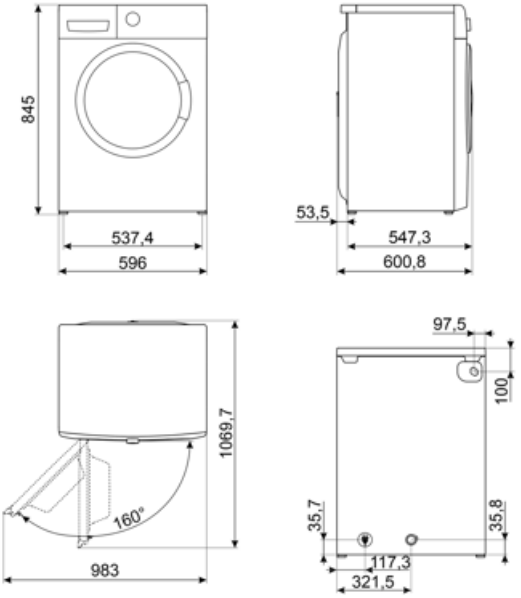

Symbols glossary



Acquastop: Some Smeg dishwashers are equipped with a simple Acquastop: float sensor in the bottom which is necesary to prevent an accidental leakage of water inside the appliance.



Variable load: In all models of washing machines is present the system of variable load, according to which the machine automatically diversifies the wash cycle and the time of operation depending on the quantity and type of laundry introduced, allowing a significant saving of water and energy power, up to 30% compared to the versions with fixed load.



Child lock: some models are fitted with a device to lock the programme/cycle so it cannot be accidentally changed.



34 cm: Large loading hatch of 34 cm in diameter, makes laundry loading and unloading easier and faster with maximum ease of use.



This option advises when the periodic cleaning of the filters is needed, in order to avoid forgetfulness and thus guarantee the perfect functioning of the dryer over time. The convenient position of the filters makes maintenance fast and extremely simple.



Prewash: program designed for heavily soiled garments.



Eco 40-60: reference programme defined by EU regulations for measuring the energy performance of washing machines. Ideal for normally soiled cotton garments washable at 40 °C or 60 °C, it provides an excellent balance between cleaning performance and savings, although it requires a longer washing time.



To drain the water in the machine.



Super fast 14 min.: a programme designed to wash small amounts of laundry fast, ideal for washing lightly soiled garments.



Shirts: Specific program that allows you to wash shirts with the utmost attention. The addition of steam at the end of the cycle ensures a reduction in the formation of creases and ironing times.



Easy Iron: this is an option which can be selected to ensure the finished laundry is left with less creases to make ironing easier.



Automatic Load Balancing: provides an ideal distribution of laundry in the drum. In case if the imbalance is detected, the rotation speed starts being controlled in such way to evenly redistribute laundry in the drum, and thus reduce vibration.



LCD display: to optimize performance and simplify the use of the appliance.



Gentle drying: program designed to get laundry ready for easy ironing.



Smeg's evolution towards more intelligent and eco-friendly models has led to the choice of Inverter technology, which significantly reduces consumption.



Cotton: programme designed for washing medium to heavily soiled cotton garments, ensuring thorough and effective cleaning.



Program for drying cotton items including sheets, pillow cases, pajamas, lingerie, tablecloths, etc



Mixed fabrics: this cycle is designed for lightly soiled laundry in a mix of cottons and synthetics, or can be used just to refresh stored items.



Extra rinse: The Extra rinse option: can be added to the selected programme when more thorough cleansing of special fabrics is needed.



Synthetics: programme designed for synthetic and mixed-fibre fabrics. Ideal for lightly to normally soiled garments, it uses moderate temperatures and a gentler washing action to protect the fibres and reduce creasing, ensuring effective cleaning without stressing the materials.

Wool: this programme for wool or delicate fabrics uses slower rotations of the drum to ensure the utmost care for clothing.

Steam Option: the steam is perfect for smoothing out creases, refreshing fabrics, neutralizing odors and releasing dirt, destroying allergens more quickly than by washing the item in water.

Energy efficiency class D

Option that allow to reduce times of the selected program.

Program for delicately treating garments in synthetic or mixed fabrics, such as t-shirts and blouses.

Wash & Dry: a programme designed to wash and dry up to 6 Kg of cotton laundry in one continuous cycle, without requiring any additional settings. Thanks to the optimisation of both washing and drying phases, it delivers effective and convenient results, leaving garments ready to wear or store at the end of the programme.