WDN854SLDSG

EAN Code	8017709340421
Product Family	Washer-Dryer
Commercial width	60 cm
Commercial depth	Standard capacity
Installation	Free-standing
Load type	Frontal



Programs

Controls	Electronic
Programmes graphics	Written in EN
No. of programmes	14

Programmes

Cotton 5kg	Eco 40-60	Express
Synthetic dry	Wool/Hand wash	Cotton
Anti-allergy	Cotton Dry	Drain + Spin
Mix	Quick Wash 14 min	Rinse
Shirts	Synthetics	

Washing Temperature

Cool	20°C	30°C
40°C	50°C	60°C
70°C	80°C	90°C

Special programmes

Cotton 5 kg	Express	Quick/Quick 14'
Wool/Hand wash	Anti-allergy	

Display

Residual time indicator	delay start	programme status indication
spin regulation	temperature regulation	

Display type LCD DISPLAY

Buttons/Options

Ending in	Extra rinse	Fast/Intense
Prewash	Anti-wrinkle (easy ironing)	Steam
Drying		

Programme progress indicator (light)	On display
End of cycle indicator (light)	On display

Technical Features

Type of motor	Brushless/Inverter
Electronic control functioning	Yes
Programme selection knob	Yes
Spin speed selection on display/LED	No spin/ 600/ 800/ 1200/ 1400
Display/led for temperature regulation	Yes
Polypropilene tank	Yes
Basket	Stainless steel
Drum capacity	55 l
Door diameter	33 cm

Door opening	160°
Automatic variable load	Yes
Antifoam system	Yes
Load balancing system	Automatic
Easy to access filter	Yes
Child lock (functions block)	Control block
Anti-flood system	Yes
Water supply	Single, cold

Performance / Energy Label

Max spin speed	1400 giri/min

Performance / Energy Label - Reg. 2019

Supplier's name or trademark	SMEG	**Water Consumption (complete cycle)**	65 litre

Rated capacity washing cycle	8 kg
Rated capaciity complete cycle	5 kg
Weighted energy consumption lavaggio	47 kWh
weighted energy consumption (ciclo complete)	264 kWh
Water consumption (washing cycle)	46 litre
Spin-drying efficiency class	B
Airbone acoustical noise class	B
Airbone acoustical noise	76 dB(A) re 1 pW
Eco 40-60 programme duration (Rated washing capacity)	3:38 h:min
Wash and dry cycle duration (Rated capacity)	8:30 h:min

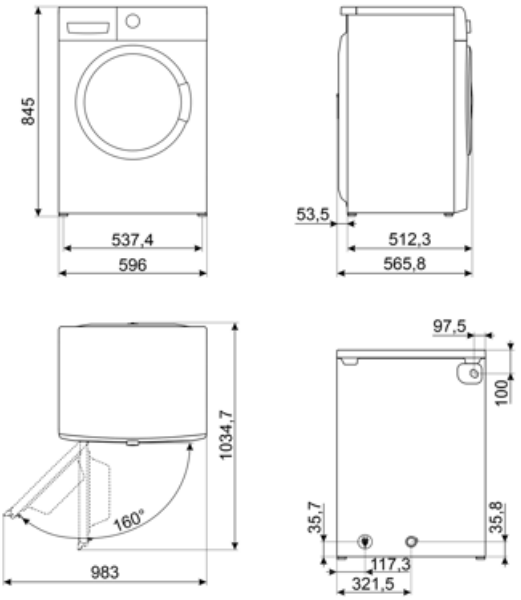

Symbols glossary



Easy Iron: this is an option which can be selected to ensure the finished laundry is left with less creases to make ironing easier.



Automatic Load Balancing: provides an ideal distribution of laundry in the drum. In case if the imbalance is detected, the rotation speed starts being controlled in such way to evenly redistribute laundry in the drum, and thus reduce vibration.



LCD display: to optimize performance and simplify the use of the appliance.



Gentle drying: program designed to get laundry ready for easy ironing.



Smeg's evolution towards more intelligent and eco-friendly models has led to the choice of Inverter technology, which significantly reduces consumption.



Antiallergic: Antiallergic program with particular attention to the total removal of residual detergent.



Eco 40-60: reference programme defined by EU regulations for measuring the energy performance of washing machines. Ideal for normally soiled cotton garments washable at 40 °C or 60 °C, it provides an excellent balance between cleaning performance and savings, although it requires a longer washing time.



To drain the water in the machine.



Super fast 14 min.: a programme designed to wash small amounts of laundry fast, ideal for washing lightly soiled garments.



Variable load: In all models of washing machines is present the system of variable load, according to which the machine automatically diversifies the wash cycle and the time of operation depending on the quantity and type of laundry introduced, allowing a significant saving of water and energy power, up to 30% compared to the versions with fixed load.



Child lock: some models are fitted with a device to lock the programme/cycle so it cannot be accidentally changed.



33 cm: Large loading hatch of 30-32-33 cm in diameter, makes laundry loading and unloading easier and faster with maximum ease of use.



This option advises when the periodic cleaning of the filters is needed, in order to avoid forgetfulness and thus guarantee the perfect functioning of the dryer over time. The convenient position of the filters makes maintenance fast and extremely simple.



Prewash: program designed for heavily soiled garments.



Program for drying cotton items including sheets, pillow cases, pajamas, lingerie, tablecloths, etc



Cotton: programme designed for washing medium to heavily soiled cotton garments, ensuring thorough and effective cleaning.



Mixed fabrics: this cycle is designed for lightly soiled laundry in a mix of cottons and synthetics, or can be used just to refresh stored items.



Extra rinse: The Extra rinse option: can be added to the selected programme when more thorough cleansing of special fabrics is needed.



Shirts: Specific program that allows you to wash shirts with the utmost attention. The addition of steam at the end of the cycle ensures a reduction in the formation of creases and ironing times.



Steam Option: the steam is perfect for smoothing out creases, refreshing fabrics, neutralizing odors and releasing dirt, destroying allergens more quickly than by washing the item in water.



Program for delicately treating garments in synthetic or mixed fabrics, such as t-shirts and blouses.



Synthetics: programme designed for synthetic and mixed-fibre fabrics. Ideal for lightly to normally soiled garments, it uses moderate temperatures and a gentler washing action to protect the fibres and reduce creasing, ensuring effective cleaning without stressing the materials.



Wool/Hand wash: ideal program for delicate, wool and silk garments that require particular attention in washing. It uses room temperature water and slow drum rotations to ensure maximum garment care.