WT5700SL8

Family	Professional dishwasher tables
Subfamily	Steam condenser 600 hood type tables
Subfamily AS400	ZK ACCESSORI X LVS PROFESS.
Width	700 mm
Depth	800 mm
Height	821 mm
Net weight	29,000 kg
Entry table	Yes
Suitable for	HTY625DH-DEH
Adjustable feet	5 mm
Sink depth	250 mm

Construction

Back rise	Yes	**Back height**	100 mm
Hole shower diameter	32 mm	**Lower shelf**	Yes

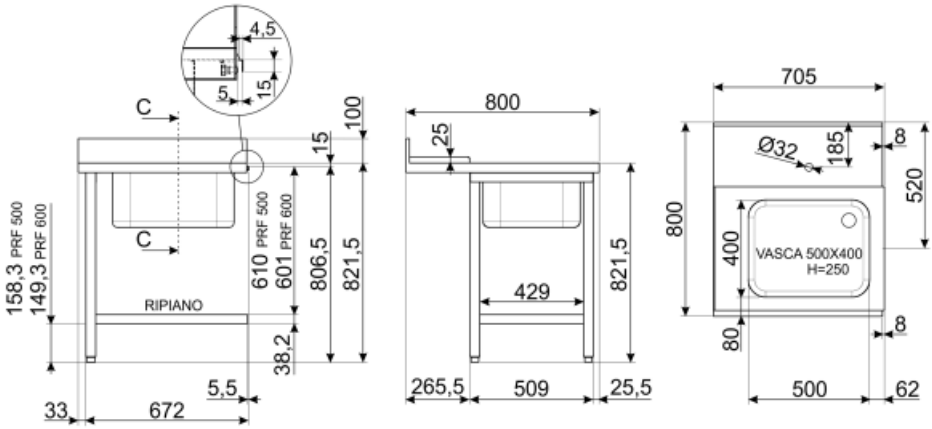

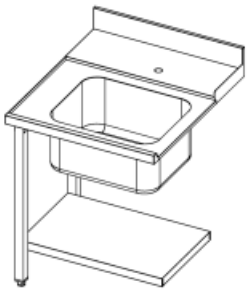

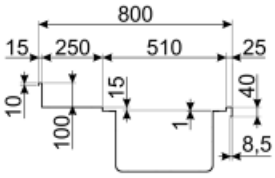

SEZIONE C-C