WTX61200R8

Family	Professional dishwasher tables
Subfamily	Steam condenser 600 hood type tables
Subfamily AS400	ZK ACCESSORI X LVS PROFESS.
Width	1200 mm
Depth	750 mm
Height	822 mm
Net weight	29,000 kg
Exit table	Yes
Suitable for	HTY625DH-DEH
Adjustable feet	5 mm

Construction
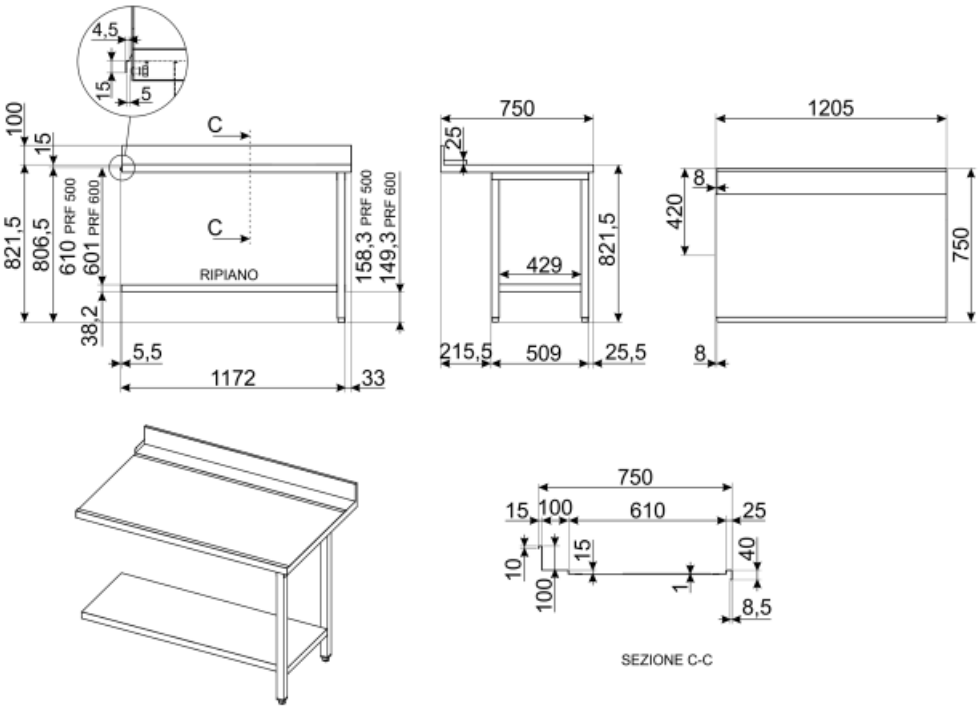
Back rise	Yes	**Lower shelf**	Yes
Back height	100 mm