ZAC8173N1F



Product Family	Refrigerator
Installation	Built-in
Category	Bottom Mount
Built-in niche	178
Reference width	Until 60 cm
Reference height	160 - 200 cm
Cooling type	Fan assisted refrigerator, no-frost freezer
Defrost	Automatic
Hinge type	Sliding
Hinge position	Right
Reversible door	Yes
EAN code	8017709331948

Aesthetics

Aesthetic	Universale	**Logo**	Silk screen
Colour	White	**Door shelves profile color**	Silver
Material	Metal sheet	**Drawers profile color**	Silver
Handle type	Fixed	**Color of glass shelf profile**	Chrome
Side material	Steel	**Display**	LED
Side colour	White	**Display position**	Interno (cella frigo)

Refrigerator compartment features

No. of adjustable shelves	4	**Crisper Cover**	Yes
Number of fruit and vegetables drawers	2	**Type of crisper/vegetable drawers cover**	Glass
Shelves material	Glass	**Internal light in fridge**	Yes
Type of crisper/vegetable drawers cover	Standard	**Type of internal light (fridge)**	LED

Refrigerator Inner Door

No. of door shelves with transparent cover	1	**No. of bottle shelves**	1

Number of adjustable door shelves	2

Other Refrigerator features

Accessories	Egg tray	**Fan**	Yes

Freezer compartment features

Number of drawers	3

Other Freezer features

Accessories	1 ice box, 1 eutectic

Other technical features

Functions display	Fast freezing
Type of temperature control	Electronic
No. of compressors	1
Refrigerant gas type	R600a
Type of compressor	Standard
Foam agent	Cyclopentane

Performance / Energy Label - Reg. 2019

Annual energy consumption	268 kWh/a	**Sum of the volumes of the frozen compartment(s)**	61 l
Total net volume	254 l	**Sum of the volumes of the chill compartment(s) and the unfrozen compartment(s)**	193 l

Electrical Connection

Electrical connection rating	100 W	**Frequency (Hz)**	50 Hz
Current	1,1 A	**Power supply cable length**	240 cm
Voltage (V)	220-230 V	**Plug**	(M) Sud Africa

Logistic Information

Width	548 mm	**Height**	1772 mm
Width of the built-in niche	560 mm	**Height of the built-in niche**	1780 mm
Depth without handle	549 mm	**Product width with maximum doors opening**	549 mm
Depth of the built-in niche	550 mm	**Spacer depth**	38 mm

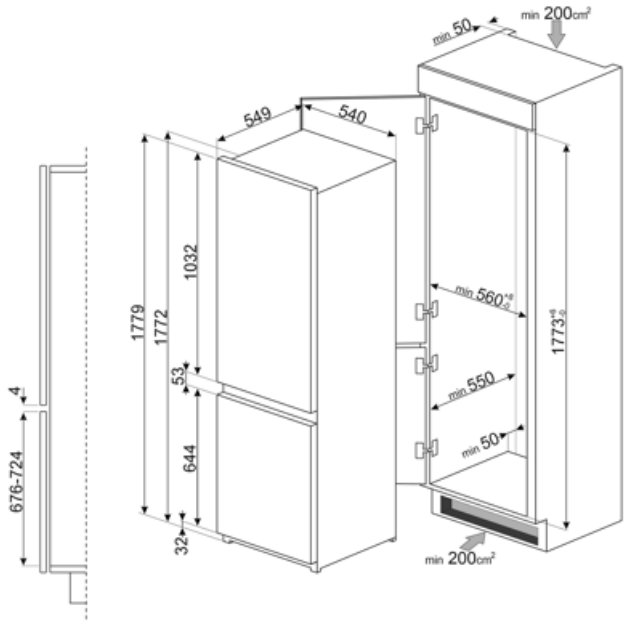

Symbols glossary



The automatic defrost system works by automatically defrosting at regular intervals eliminating the need to defrost altogether.



Ventilated: Forced distribution of cold air in the refrigerator compartment, which allows even temperature distribution within the fridge.



LED interior lighting: is a more energy efficient and long lasting way of illuminating the interior of the appliance.



No Frost: The No Frost and Frost free systems prevent ice from forming so that no defrosting is required.



LED display: to show programmes, functions and options selected and the time to the end of the cycle.



Fast freezing: The fast freezing function brings the temperature of the compartment down when activated a few hours prior to usage.



Built-in niche