ZAS9F174NE



Product Family	Freezers
Installation	Built-in
Built-In Niche	178 cm
Category	Single door
Reference width	Until 60 cm
Reference height	160 - 200 cm
Cooling type	No Frost
Hinge type	Sliding
Hinge position	Right
Reversible door	Yes

Aesthetics

Aesthetic	Universale	**Side colour**	White
Colour	White	**Logo**	Silk screen
Material	Steel	**Drawers profile color**	Silver
Side material	Metal	**Display**	LCD Touch

Freezer compartment features

Number of drawers	5
No. of compartments with flap	2

Other technical features

Freezer compartment accessories	Ice cube tray	**Type of temperature control**	Electronic
Functions display	Fast Feezing, Control lock, Temperature Alarm, Cooling timer	**No. of compressors**	1
		Refrigerant gas type	R600a
		Type of compressor	Standard
Fast freezing button	Yes	**Refrigerant Quantity (gr)**	48 g
Temperature alarm lamp	Yes	**Foam agent**	Cyclopentane
Door open alarm	Acoustic		
Temperature alarm	Acoustic and visual		

Electrical Connection

Electrical connection rating	150 W	**Frequency (Hz)**	50 Hz
Current	1 A	**Power supply cable length**	240 cm
Voltage	220-240 V	**Plug**	(M) Sud Africa

Logistic Information

Width	546 mm	**Depth of the built-in niche**	550 mm
Width of the built-in niche	560 mm	**Height of the built-in niche**	1780 mm
Depth without handle	549 mm	**Spacer depth**	38 mm
Height, maximum value	1772 mm		

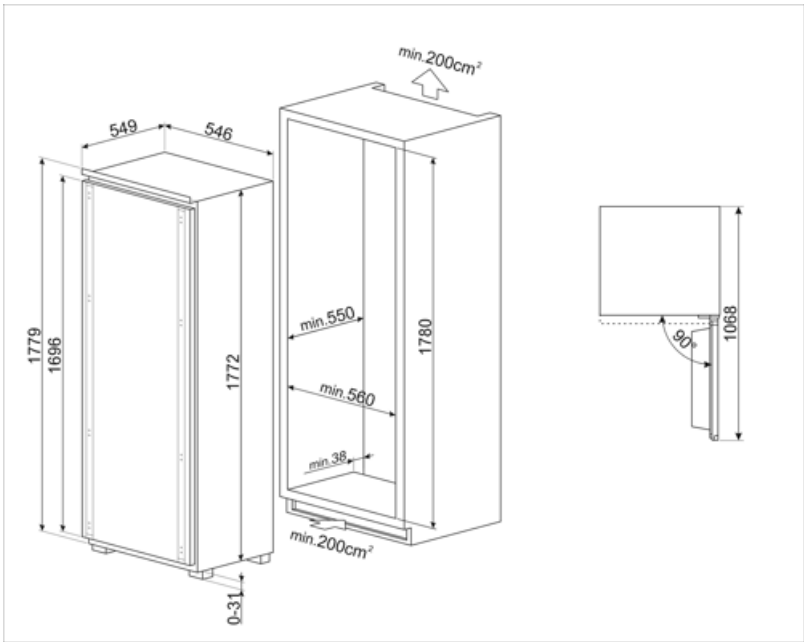

Symbols glossary



4 stars freezing compartment for better food preservation.



LCD display: to optimize performance and simplify the use of the appliance.



Built-in niche



Child lock: some models are fitted with a device to lock the programme/cycle so it cannot be accidentally changed.



Fast freezing: The fast freezing function brings the temperature of the compartment down when activated a few hours prior to usage.



No Frost: The No Frost and Frost free systems prevent ice from forming so that no defrosting is required.